HAZLOC Environment LED Luminaire

General Safety Information:

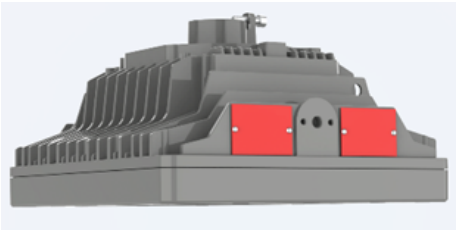

Picture is for illustration purposes only. Your model may vary

- To reduce the risk of death, personal injury or property damage from fire, electric shock, falling parts, cuts/abrasions, and other hazards, read all warnings and instructions included with and on the luminaire box and all luminaire labels.
- Before installing, servicing, or performing routine maintenance upon this equipment, follow these general precautions.
- Commercial installation, service and maintenance of luminaires should be performed by a qualified licensed electrician.
- DO NOT INSTALL DAMAGED PRODUCT!
- This luminaire is intended to be connected to a properly installed and grounded.
- UL listed junction box.
- Make sure that the supply voltage is the same as the luminaire voltage.
- Do not install where the marked operating temperatures exceed the ignition temperatures of the hazardous atmosphere.
- Do not operate in ambient temperatures above those indicated on the luminaire nameplate.
- All gasket seals must be clean and undamaged.

WARNING:

RISK OF ELECTRICAL SHOCK

- Turn off electrical power at fuse or circuit breaker box before wiring luminaire to the power supply.
- Turn off the power when you perform any maintenance.
- Verify that supply voltage is correct by comparing it with the luminaire label information.
- Make sure all electrical and grounded connections in accordance with the National Electrical.
- Code and any applicable local code requirements and suitable for wiring system.
- All wiring connections should be capped with UL approved wire connectors.
- Luminaire must be supplied by a wiring system with an equipment grounding conductor.

Model BLM2 Series is suitable for use in the following hazardous (classified) areas as defined by the National Electrical Code (NEC) and Canadian Electrical Code (CEC):

For Class I, Division 1 Luminaires, suitable for locations having deposits of readily combustible paint residues.

Hazardous Locations

Class I, Division 1, Groups B, C, D

Class I, Division 2, Groups A, B, C, D

Class II, Division 1, Groups E, F, G

Class II, Division 2, Groups F, G

Class III , Division 1

Refer to the luminaire nameplate for specific classification information, maximum ambient temperature suitability and corresponding operating temperature (T-Code).

RED SKY LIGHTING LLC
9370 Pittsburgh Ave Rancho Cucamonga, CA 91730, USA
+1 (262) 456-5002 / contact@redskylighting.com / www.redskylighting.com

HAZLOC Environment LED Luminaire

CAUTION:

RISK OF INJURY

- Always wear gloves and safety glasses when removing luminaire from carton, installing, servicing or performing maintenance.
- Avoid direct eye exposure to the light source while it is on.
- Account for small parts and destroyed packing material,

  as these may be hazardous to children.

CAUTION:

- Keep combustible and other materials that can burn away from luminaire and lamp/lens.
- MIN 90°C SUPPLY CONDUCTORS.

Models:

BLM2-2-3-4-4A-5-6-7-8-9-10

2=Wattage (3L-21W, 3000Lm, 6L-40W, 5600Lm, 7L-50W, 6900Lm*, 8L-60W, 8100Lm)

3=Voltage (120-277–120-277 Vac, 347-480–347-480 Vac*)

4= CCT (5K-5000K,4K-4000K,3K-3000K)

4A=Internal Code (Blank - Standard, HAR-Custom)

5=Beam (T2-Type II**, T3-Type III**, T5-110°)

6=Rating (H1-C1D1/C1D2/C2D1/C3)

7=Lens (CG - Clear Glass, DG - Diffuse Glass)

8=Color (GRY-Grey)

9=Mounting*** (PND – Pendant, YKE–Yoke, C1 – Ceiling, S1 - Stanchion 25° (1-1/4” NPT),
S2 - Stanchion 25° (1-1/2” NPT), S3 - Stanchion 90° (1-1/4” NPT), S4 - Stanchion 90° (1-1/2” NPT),
W1 - Wall 25°, W2 - Wall 90°, P1 - Slip-Fit Stanchion)

10=CRI (BLANK-80 CRI Standard, CRI-90 CRI****)

* 50W only with 347-480V AC, 347-480V AC only with 50W.

** Only available with Clear Glass Option.

*** Mounting accessories included, no separate order required.

**** CRI 90 option – expect longer lead time.

HAZLOC Environment LED Luminaire

Operating characteristic:

Rated voltage	power	Model	Ambient Temp		
			Class I, Division 1, Groups B, C, D	Class I, Division 2, Groups A, B, C, D	Class II, Division 1, Groups E, F, G
120-277Vac	21W	BLM2-3L-120-277-H1	-40℃(-40°F) ~+65℃(149°F)	-40℃(-40°F) ~+65℃(149°F)	65℃(149°F)
	40W	BLM2-6L-120-277-H1			
	60W	BLM2-8L-120-277-H1	-40℃(-40°F) ~+64℃(147.2°F)	-40℃(-40°F) ~+64℃(147.2°F)	64℃(147.2°F)
347-480Vac	50W	BLM2-7L-347-480-H1	-40℃(-40°F) ~+65℃(149°F)	-40℃(-40°F) ~+65℃(149°F)	65℃(149°F)

General Wiring Diagram:

CAUTION: Turn off electrical power at fuse or circuit breaker box before wiring luminaire to the power supply.

Connecting panels to AC source supply: All units must be individually connected to the AC supply.

Black = Line

White = Neutral

Green = Ground

Dimming control wire: GRAY (NEG)

PURPLE (0~10V Input)

YELLOW (+10V Output)

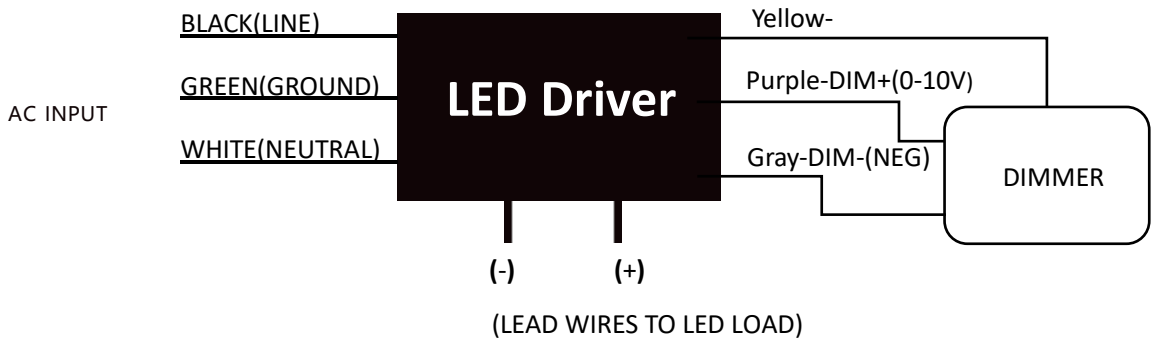

Installation & Operation:

Note:

1. The minimum length of all integral luminaire field wiring leads provided is 18 inches (457.2 mm) extended outside of the field wiring conduit opening for all mounting means.

All wiring connections are to be made outside of the luminaire without opening or disassembling of any parts of the luminaire enclosure.

2. For luminaire with trunnion mount bracket “Mounting Orientation – Lens Facing Down 0°~90° From Vertical Only”.

3. The dimming wire and brunch circuit should be separated in different wiring compartment.

HAZLOC Environment LED Luminaire

Electrical Connection:

1.Introduce the wires of branch circuit as following:

Black-wire connects to Line

White-wire connects to Neutral

Green-wire connects to Ground

2. The thread of entry hole of housing is 3/4NPT. Attach the housing to suitable conduit.

Product Size:

Installation:

The following installation is applicable to

Class I Division 1, Groups B, C, D

Class I Division 2, Groups A, B, C, D

Class II Division 1, Groups E, F, G

Class II Division 2, Groups F, G

Class III Division 1

Note 1: All installation must refer to RSL " NPT Assembly Instructions" to prevent water leakage.

Note 2: Stanchion slip fitter For C1D1 and C2D1: This pole-mounted bracket functions exclusively for structural support and involves no internal wiring.

Note 3: Yoke/Pole/Stanchion slip fitter: Electricians should use metal electrical conduits meeting the C1D1 and C2D1 specification to connect to the Body_3/4” NPT port.

RED SKY LIGHTING LLC
9370 Pittsburgh Ave Rancho Cucamonga, CA 91730, USA
+1 (262) 456-5002 / contact@redskylighting.com / www.redskylighting.com

HAZLOC Environment LED Luminaire

1. Pendant:

Step 1： Connect field supply wires to luminaire wire leads. Wire per wiring diagram.

Step 2： Thread the fixture onto the NPT 3/4 inch conduit. Tighten the M5 set screw.

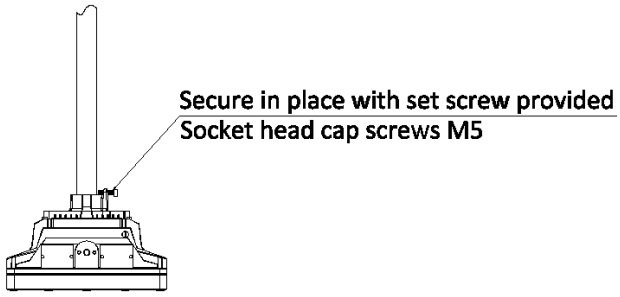

2. Yoke:

Ceiling

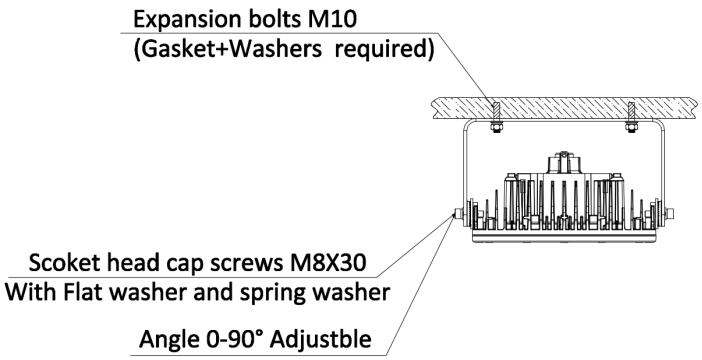

Wall

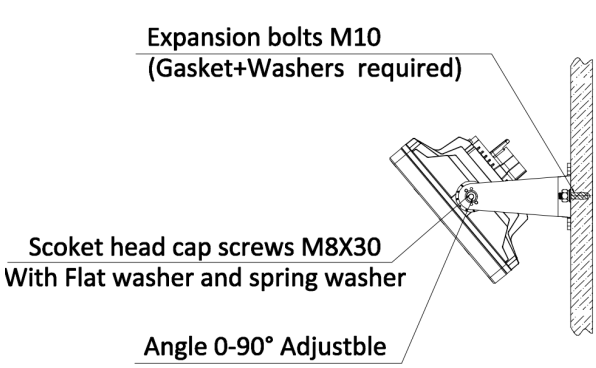

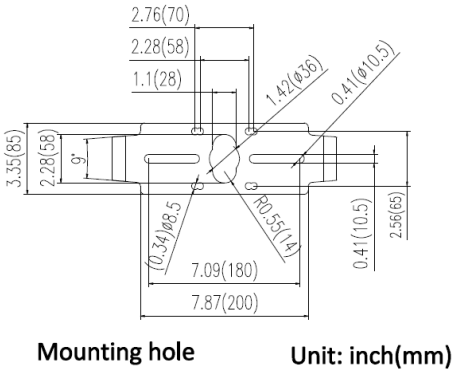

Step 1: Drill holes on the wall or fixing plate according to the Yoke dimension drawing.

Step 2: Align the Yoke mounting surface with the wall mounting holes and fasten it to the wall or fixing plate using M10 (not provided) specification expansion screws with washers and gaskets.

Step 3: Adjust to the desired angle via the M8 screws on both sides of the Yoke. After adjustment, tighten the M8 screws to a torque value of 7 N.m.

HAZLOC Environment LED Luminaire

3.Pole (Pipe Clamp kit sold separately for pipe diameters of 1-7/8 in. or 2-3/8 in.):

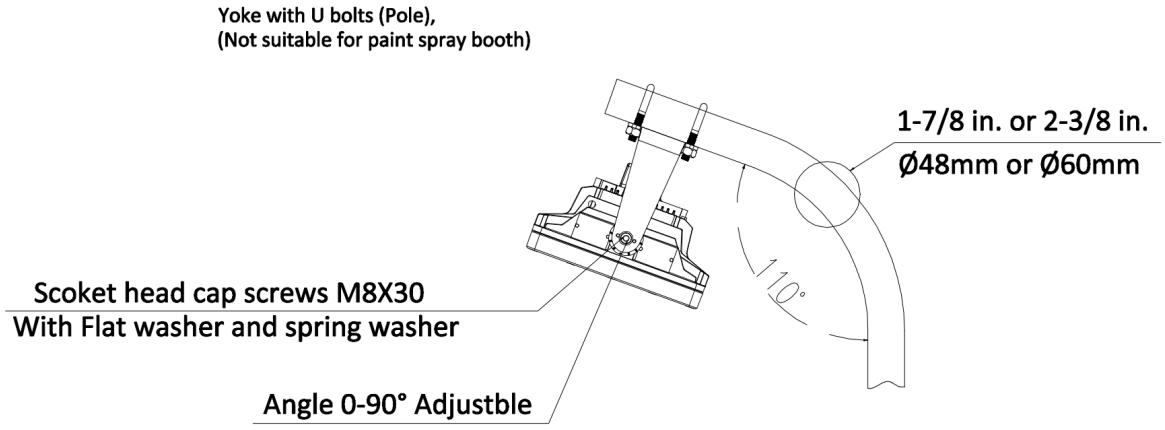

Step 1: Check diameter of pipe to make sure you are using the correct size clamp.

Step 2: Place the Fixture Bracket against the installed pipes.

Step 3: Place the clamp (U-bolts) on the pipe and fit it through the openings in the bracket.

Step 4: Adjust fixture to desired angle. Insert and tighten the supplied locking nuts and washers to secure the clamp to the pipe.

Step 5: Use the appropriate sealing fittings for safe cable termination.

4. Wall90° and Wall25°:

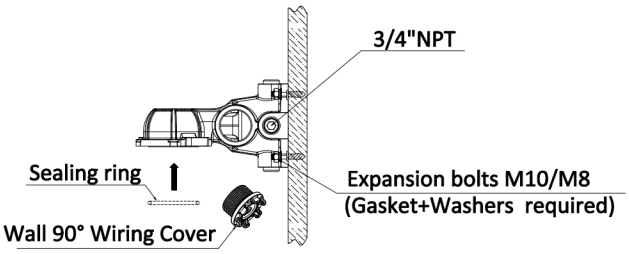

Step 1

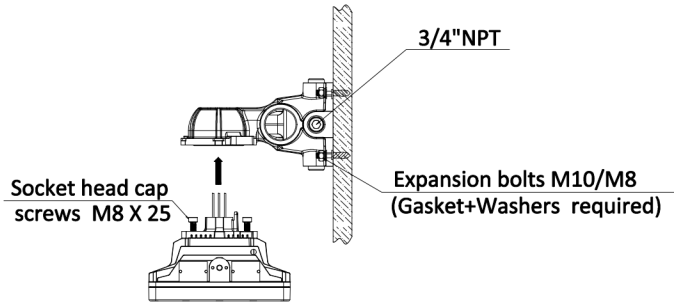

Step 2

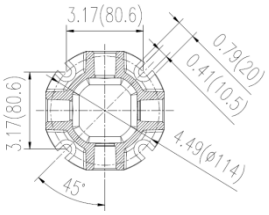

Mounting hole Unit: inch(mm)

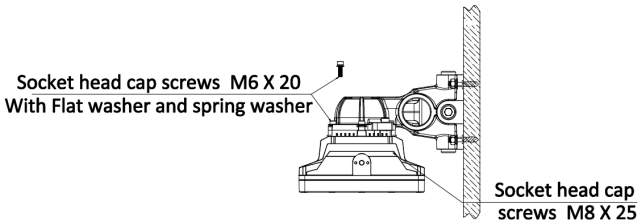

Step 3

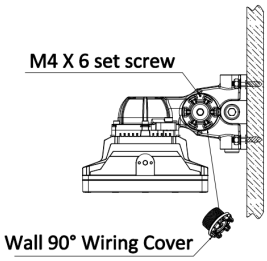

Step 4

HAZLOC Environment LED Luminaire

Step 1: Drill holes on the wall according to the Wall Bracket dimension drawing. Align the Wall Bracket with the mounting holes and fasten it to the wall using M10/M8 (not provided) specification expansion screws with washers and gaskets. Meanwhile, check if the sealing ring is properly installed in place, and ensure the Wiring Cover has been removed for later use.

Step 2: Pre-install 2 M8 screws on the lamp body. Do not fully tighten them temporarily, maintaining a gap of approximately 14 mm from the lamp body. Pass the M8 screws on the lamp body through the crescent holes of the Wall Bracket, rotate 12 degrees to align with the 6 M6 threaded through holes of the bracket, and at the same time, lead the lamp's wires out through the hole of the Wiring Cover*.

Step 3: Tighten the 6 M6 screws and 2 M8 screws to a torque value of 7 N·m. Lead the external conduit through the 3/4"NPT port to the inner cavity of the Wall Bracket and pass it out through the hole of the Wiring Cover. Connect the wires led out from the lamp to the wires from the conduit using WAGO terminals.

Step 4: Tuck the sorted and connected wires into the inner cavity of the Wall Bracket. Inspect the wiring to ensure all wires are safely placed inside the lamp housing. Tighten the Wiring Cover to a torque value of 10 N·m, then tighten the M4 setscrews to a torque value of 1.5 N·m.

*Optionally, the lamp's lead wires can be passed through the 3/4"NPT port of the Wall Bracket and guided to the customer's junction box via a conduit to complete the wiring operation.

5. Stanchion 90° and Stanchion 25°:

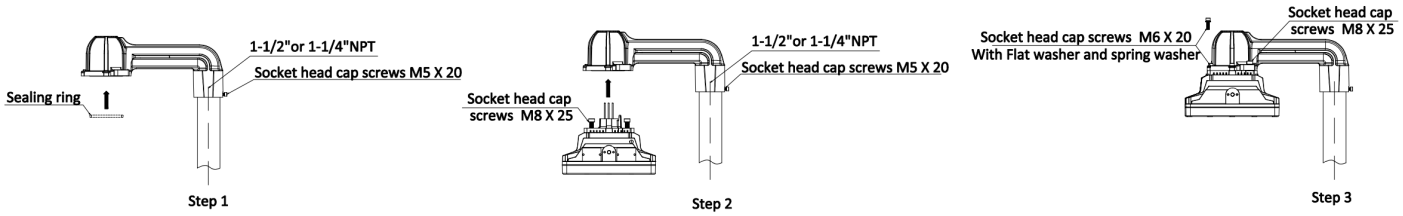

Step 1: Firmly screw the Stanchion Bracket onto the NPT threaded end of the post, ensuring a thread engagement length of ≥5 threads. Confirm the proper installation direction, then tighten the M5 setscrews to a torque value of 2 N·m. Meanwhile, check if the sealing ring has been correctly installed on the bracket.

Step 2: Pre-install 2 M8 screws on the lamp body. Do not fully tighten them temporarily, maintaining a gap of approximately 14 mm from the lamp body. Pass the M8 screws on the lamp body through the crescent holes of the bracket, rotate 12 degrees to align with the 6 M6 threaded through holes of the bracket. At the same time, wiring can be performed via WAGO terminals in the inner cavity of the bracket, or the lamp's lead wires can be routed to the junction box at the conduit through the 1-1/2" or 1-1/4"NPT port for wiring.

Step 3: Inspect the wiring to ensure all wires are safely placed inside the lamp housing. Then tighten the 6 M6 screws and 2 M8 screws to a torque value of 7 N·m.

HAZLOC Environment LED Luminaire

6. Ceiling:

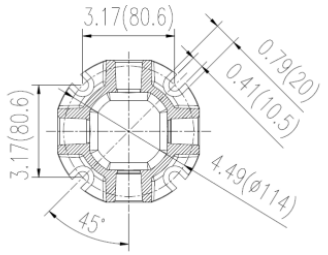

Mounting hole Unit: inch(mm)

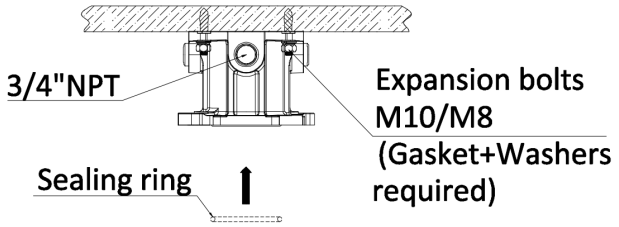

Step 1

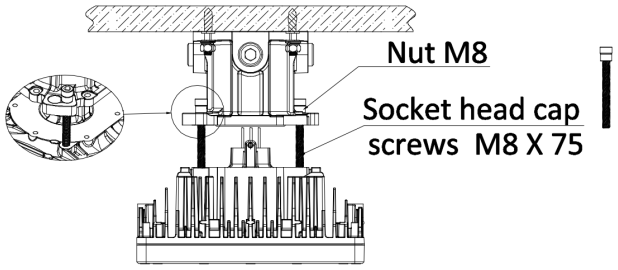

Step 2*

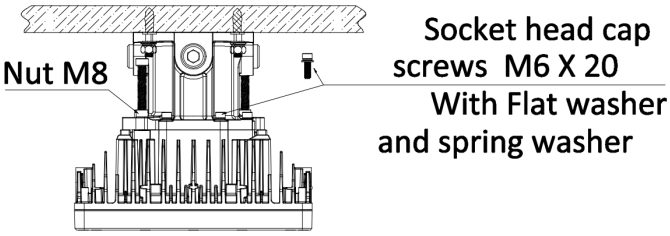

Step 3

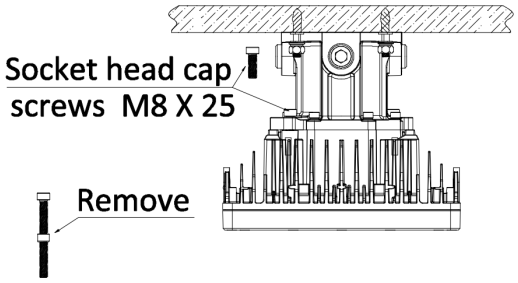

Step 4

Step 1: Drill holes on the wall according to the Ceiling Bracket dimension drawing. Align the Ceiling Bracket with the mounting holes and fasten it to the wall using M10/M8 (not provided) specification expansion screws with washers and gaskets. Meanwhile, check if the sealing ring is properly installed in place.

Step 2: Pre-install 2 M8 Screw and nut assemblies on the lamp body. Then pass the M8 Screw and nut assemblies on the lamp body through the crescent holes of the bracket, rotate 12 degrees to align with the 6 M6 threaded holes of the bracket, suspended on a bracket. At this moment, wiring can be performed via WAGO terminals in the inner cavity of the bracket, or the wires can be routed to the conduit for wiring through the 3/4"NPT port.

*When suspending wiring operations, it is recommended to use Safety Cable to prevent collisions and accidental drops of lighting fixtures.

Step 3: Inspect the wiring to ensure all wires are safely placed inside the lamp housing. Align the CEIL and FIXTURE explosion-proof surfaces by adjusting the screw and nut assemblies on the lamp body, then tighten the 6 M6 screws to a torque value of 7 N・m.

Step 4: Remove 2 M8 Screw and nut assemblies, then tighten the 2 M8 screws to a torque value of 7 N・m.

HAZLOC Environment LED Luminaire

7. Stanchion slip fitter(Pole Type Stanchion):

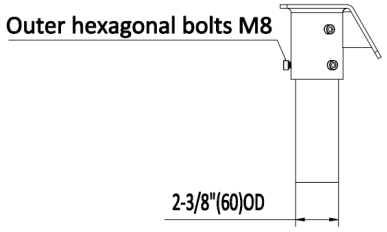

Step 1

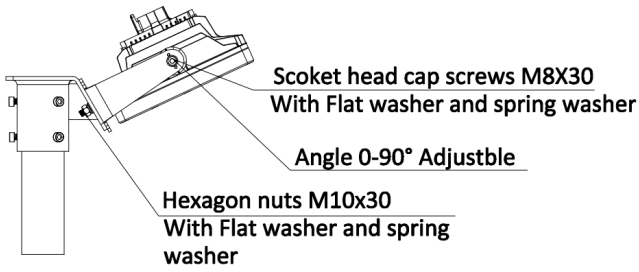

Step 2

Step 1: Slide the Slip-Fit Stanchion Bracket over the lamp pole, then tighten the 6 M8 screws to a torque value of 7 N·m.

Step 2: Align the lamp with Yoke Bracket with the Slip-Fit Stanchion Bracket and secure them using 2 M10 screws. Adjust to the desired angle via the M8 screws on both sides of the Yoke, and tighten the M8 screws to a torque value of 7 N·m after adjustment.

8. Slipfitter wall mount

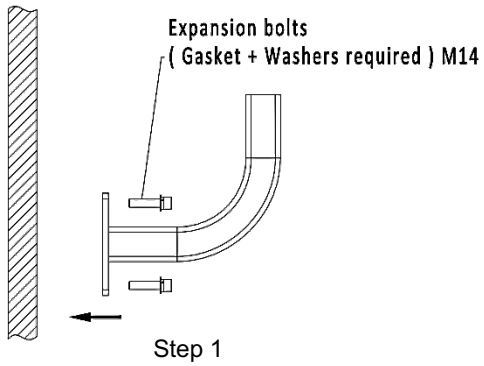

Step 1

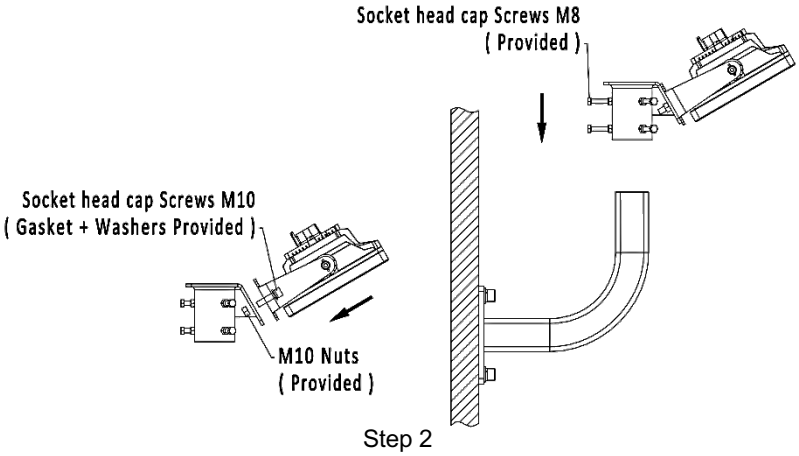

Step 2

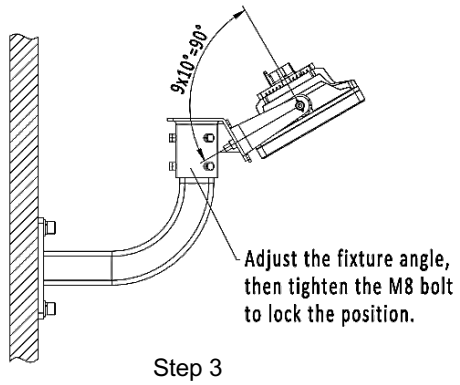

Step 3

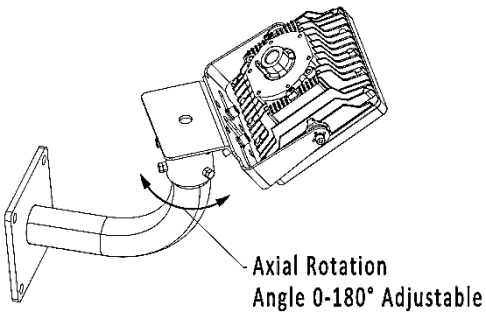

Step 1: Fix the Wall Mount Adapter to the wall using M14 bolts.

Step 2: Secure the luminaire and the stanchion slip together with M10 bolts, then loosen the M8 bolt on the stanchion slip before sliding the assembly into the Wall Mount Adapter.

Step 3: Adjust the position of the luminaire by loosening or tightening the M8 bolt.

HAZLOC Environment LED Luminaire

9. NPT male reducer：

1”to 3/4” NPT for Pendant and Yoke：

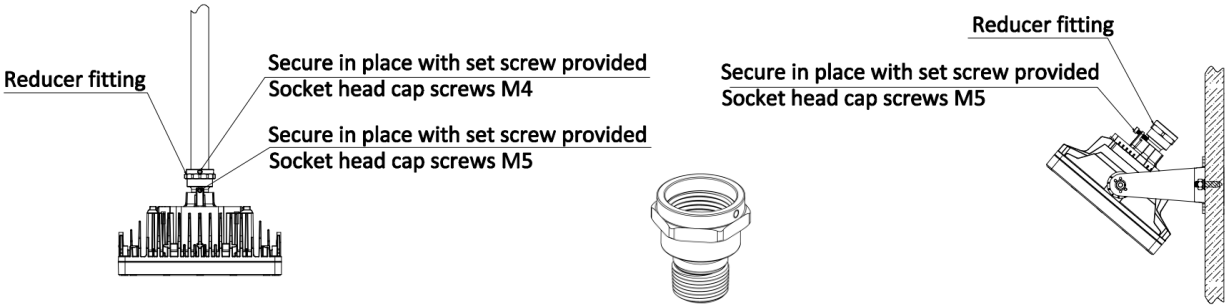

Step 1: Screw the reducer fitting into NPT 1 inch conduit, and total thread engagement should be ≥5 turns, Tighten the M4 set screw.

Step 2: Screw the reducer fitting into NPT3/4inch interface on the upper of the lamp body, and total thread engagement should be ≥5 turns, Tighten the M5 set screw.

1”to 3/4” NPT for Ceiling and Wall：

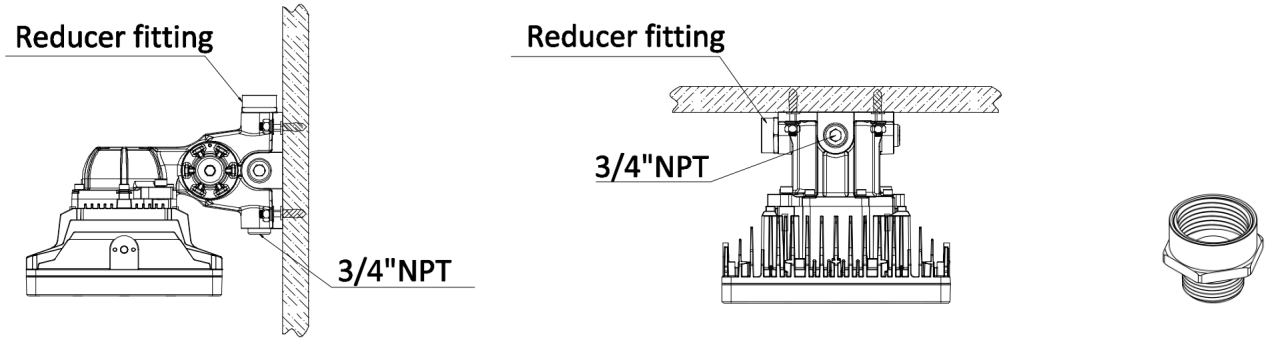

Step 1: Use the Allen wrench to remove the NPT 3/4inch plug on the Wall and Ceiling Brackets.

Step 2: Screw the reducer fitting into NPT 3/4inch interface on the upper of the bracket. The total thread engagement shall be ≥5 threads.

HAZLOC Environment LED Luminaire

Servicing:

To avoid personal injury, disconnect power to the light and allow the unit to cool down before performing maintenance.

Perform visual, electrical, and mechanical inspections on a regular basis. The environment and frequency of use should determine this. However, it is recommended that checks should be made at least once a year.

The external Lens should be cleaned periodically to ensure continued luminaire performance. Clean the Lens with a clean, damp, non-abrasive, lint-free cloth. If this is not sufficient, use a mild soap or a liquid cleaner. Do not use an abrasive, strong alkaline or acid cleaner as damage may occur.

Inspect the cooling fins of the luminaire to ensure that they are free of any contamination (i.e. excessive dust build-up). Clean with a non-abrasive cloth if needed.

Mechanically check to make sure all parts are properly assembled.

Electrically check to make sure that all connections are clean and tight.

Warranty:

We warrant that each of our LED lighting luminaires (the "Product(s)") that are purchased while this Warranty is in effect will be free from defects in materials and workmanship for the period of time specified in the table below (the "Warranty Period"). The Warranty Period runs from the date of original purchase from its authorized distributor/dealer.

We will repair, or at our option, replace the defective product (exterior finish, housing and heat sinks, lens, LED engine, power supply) during the standard warranty period. This warranty applies only to the repair or replacement of the product and only when the product is properly handled, installed and maintained according to our instructions.

This warranty excludes defects resulting from improper installation, acts of God, fire, vandal-ism or civil disturbances, power surges or improper power supply, and corrosive environment installations.

This warranty does not cover equipment, systems or components from other manufacturers that the Purchaser uses in conjunction with the Product. Any repair, alteration or modification of the Product, including replacement of Product components with components of other manufacturers will void the warranty in its entirety.

Product	Models Covered by Warranty	Warranty Period
Block-Mini Series HAZLOC Environment Led Luminaire	BLM2 series	Driver-Seven (7) Years LEDS- Ten (10) Years

HAZLOC Environment LED Luminaire

NPT Assembly Instructions*:

STEP 1: Inspect port and fitting to ensure that both are free of contaminants and excessive burrs and nicks.

STEP 2: Apply a strip of an anaerobic liquid pipe sealant around the male threads leaving the first two threads uncovered. If no liquid sealant is available, wrap Teflon tape (width of 12.7mm and thickness of 0.1mm) 2.5- 3 turns in a clockwise direction, viewed from the pipe end, leaving the re two threads Uncovered.

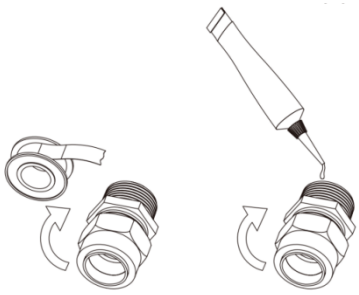

CAUTION: Teflon tape and some pipe sealants are destructive to hydraulic components. Always use extreme caution and follow manufacturer's recommendations for proper application of any sealant to prevent contamination.

STEP 3: Screw finger tight into the port.

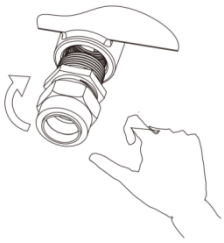

STEP 4: Wrench tighten the fitting to the correct Turns Past Finger Tight position. A properly assembled fittings total thread engagement should be 3.5 to 6 turns.

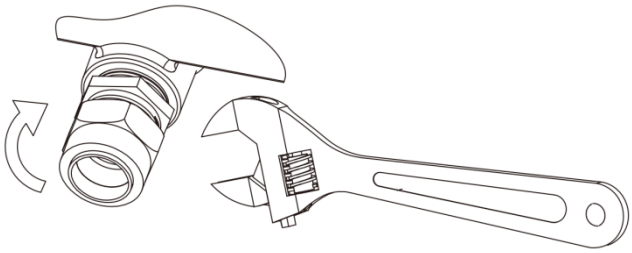

CAUTION: Never back off an installed pipe fitting to achieve proper alignment. Loosening installed pipe fittings will corrupt the seal and contribute to leakage and failure.

(*Applicable standard: ASME B1.20.1-2013).