BLOCK MINI SERIES H1

LED LIGHTING FOR HAZARDOUS AREAS
AREA & LOWBAY

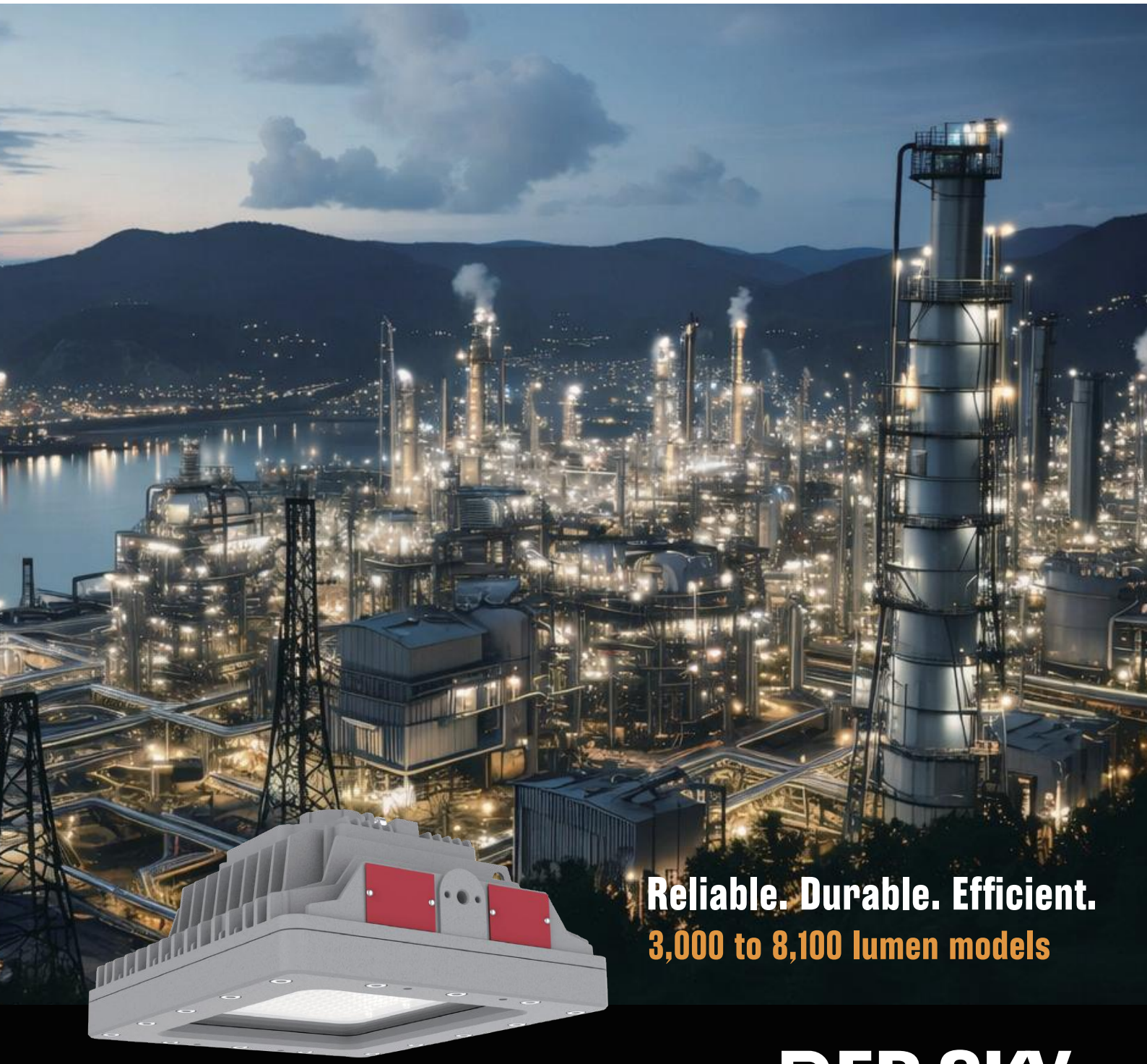

Reliable. Durable. Efficient.

3,000 to 8,100 lumen models

RED SKY

SERIOUSLY SAFE LIGHTS™

PIONEERING INDUSTRIAL ILLUMINATION FOR HARSH & HAZARDOUS CONDITIONS

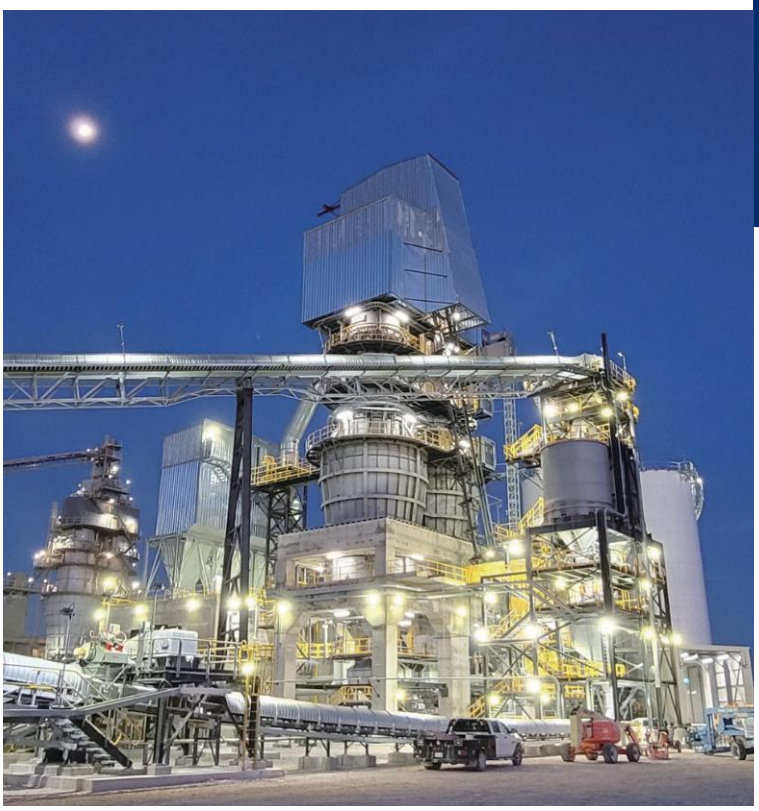

- A leading manufacturer of premium LED lights for demanding work conditions
- Headquartered in California, products assembled in the USA
- Servicing global clients across 4 continents in metal processing, oil & gas, marine, manufacturing
- Renowned for quality, dependability, client care and uncompromising safety standards

WHY CHOOSE RED SKY

SERIOUSLY SAFE LIGHTS

- Rigorously tested in our professional labs
- Surpassing industry certifications and safety protocols
- Crafted with highest grade components for maximum durability

FAST DELIVERY

- Majority of orders delivered within 14 days
- Same day shipping for products in stock
- Real-time order tracking for full transparency

TOP-NOTCH SERVICES

- Team of experts for seamless support
- Energy audit services, lighting simulation services
- Hassle-free return policy and management

SUSTAINABLE SOLUTIONS

- High luminous efficacy LEDs for energy savings
- Conscious product design
- Recyclable materials for products and packaging

BLOCK MINI SERIES

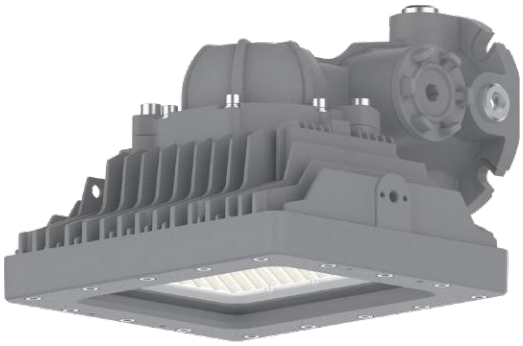

Block Mini Series H1 (BLM2 H1) is a compact, explosion-proof LED luminaire engineered for hazardous location applications requiring high reliability, long service life, and simplified installation. It is certified for Class I Division 1 and Division 2 environments, as well as Zone 1 and Zone 2 locations, where flammable gases, vapors, or combustible dusts may be present.

Designed with a factory-sealed housing and advanced thermal management system, the BLM2 H1 operates safely in high ambient temperatures up to 65°C (149°F) while maintaining consistent light output and extended lifetime. Its compact and lightweight construction makes it well suited for low mounting heights and space-limited installations. Multiple lumen packages, beam distributions, and mounting options allow the BLM2 H1 to adapt to a wide range of industrial and hazardous area lighting applications.

FEATURES

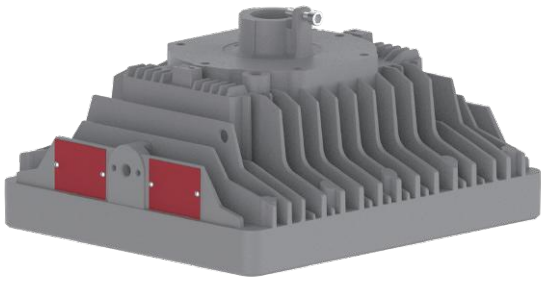

Expanded Mounting Options

Now available in Pendant, Yoke, Pole, Ceiling, Stanchion and Wall configurations for easier retrofit and new installations.

Compact, Factory-Sealed Design

Compact and lightweight construction with factory-sealed housing eliminates the need for external sealing fittings in Groups B, C, and D, simplifying installation.

High Efficiency with Long Service Life

Delivers up to 8,100 lumens with efficacy up to 140 lm/W. Advanced thermal management provides L70 rated life up to 219,000 hours at high ambient temperatures.

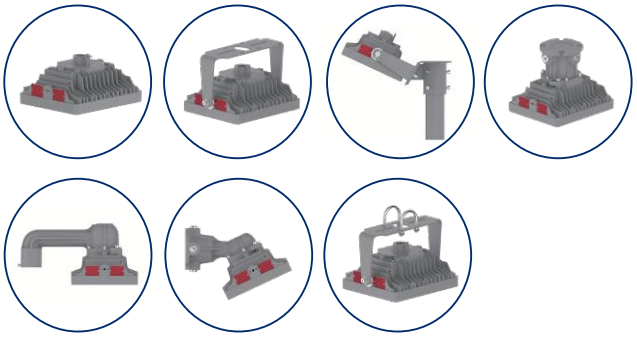

RATINGS

Class I, Division 1, Groups B, C , D;
Class I, Division 2, Groups A, B, C , D;
Class II, Division 1, Groups E, F, G.
Class II Division 2, Groups F, G
Class III
Class I, Zone 1, Groups IIB, IIB plus hydrogen, IIC
Class I, Zone 2, Groups IIA, IIB, IIC
Zone 20 and 21
Zone 22
UL 1598 Wet Locations
UL 1598A Marine Outside Type (Salt Water)
NEMA 4X
IP66& IP67
IK08 (Glass)
Salt Spray 720 hrs (ASTM B117)
3G vibration

CERTIFICATIONS

UL844
UL1598
UL 1598A
CSA C22.2 No. 137
CSA C22.2 No. 250.0
FCC Part 15, Subpart B

TECHNICAL PARAMETERS

Specification	BLM2-3L-H1	BLM2-6L-H1	BLM2-7L-H1	BLM2-8L-H1
Electrical Parameters				
Power	21W	40W	50W	60W
Rated Input Current(120V AC) Rated Input Current(277V AC) Rated Input Current(347V AC) Rated Input Current(480V AC)	0.194A 0.084A / /	0.370A 0.160A / /	/ / 0.160A 0.115A	0.555A 0.240A / /
Voltage/Frequency	120-277V AC	120-277V AC	347-480V AC	120-277V AC
Frequency	50/60Hz			
Power Factor	≥0.90			
THD	<20%			
L70	219,000 hrs@149°F			127,000 hrs@147°F
Dimming	0-10V, Range 10-100%			
Surge Protection	10KV			
Supply Wire	12-18AWG， Rated 90°C			
Warranty	LEDs: 10 years, Driver: 7 years			
Optical Parameters				
Lumen Output*	2,977Lm	5,617Lm	6,945Lm	8,100Lm
Lumen Efficacy*	140Lm/W			
Available Beam Angle	T2/T3/T5			
Correlated Color Temperature (CCT)	3000K/4000K/5000K			
Color Rendering Index (CRI)	80 CRI			
Mechanical Parameters				
Housing Material	Copper-free (< 0.4%) die-cast aluminum			
Hardware	Stainless steel 316			
Lens Material	Tempered Glass			
Mounting Options	Pendant, Yoke, Ceiling, Stanchion, Wall, Pole, Pipe			
Product Weight	11.7lbs/5.3kg	11.9lbs/5.4kg	12.8lbs/5.8kg	12.8lbs/5.8kg
Package Weight	13.9lbs/6.3kg	14.1lbs/6.4kg	15.0lbs/6.8kg	15.0lbs/6.8kg
Cable Entry	(1) 3/4" NPT w/3' 18/6 Leads (L/N/G,Dim+/Dim-/12V)			
Product Dimensions(L×W×H)	9.7x8.3x5.2in (245x210x132 mm)			
Package Dimensions(L×W×H)	13.4×11×8.3in (340×280×210mm)			
Environmental Parameters				
Ambient Operating Temperature	-40°C~+65°C(-40°F~+149°F)			64°C(147°F)
T-Code Rating	C1D1-T6, CID2-T4A, CIID1-T6	C1D1-T6, CID2-T4, CIID1-T6	C1D1-T6, CID2-T4A, CIID1-T6	C1D1-T5, CID2-T4, CIID1-T5
EPA wind rating (FT2)	0.998 (Yoke), 0.911 (Stanchion),1.019(Pole), 0.939 (Wall)			

* Value calculated based on 5000K, 80 CRI and Clear glass ,varies to differrent spec.

ORDERING INFORMATION

EXAMPLE: BLM2-8L-120-277-5K-T5-H1-CG-GRY-PND

BLM2 – ☐ – ☐ – ☐ – ☐ – ☐ – ☐ – ☐ – ☐ ☐

PRODUCT SERIES

WATTAGE

3L - 21W, 3000Lm
6L - 40W, 5600Lm
7L - 50W, 6900Lm*
8L - 60W, 8100Lm

VOLTAGE

120 - 277
120-277V AC
347 - 480*
347-480V AC

CCT

3K - 3000K
4K - 4000K
5K - 5000K

BEAM

T2 - Type II**
T3 - Type III**
T5 - Type V (NEMA 6 - Wide)

RATING

H1 - C1D1 / C1D2 / C2D1 / C3

CRI

BLANK - 80 CRI Standard
CRI90 - 90 CRI***

MOUNTING****

PND- Pendant
YKE - Yoke
P1 - Slip-Fit Stanchion
C1 - Ceiling
S1 - Stanchion 25° (1-1/4" NPT)
S2 - Stanchion 25° (1-1/2" NPT)
S3 - Stanchion 90° (1-1/4" NPT)
S4 - Stanchion 90° (1-1/2" NPT)
W1 - Wall 25°
W2 - Wall 90°

COLOR

GRY - Grey

LENS

CG - Clear Glass
DG - Diffuse Glass

* 50W only with 347-480V AC, 347-480V AC only with 50W

** Only available with Clear Glass Option

*** CRI 90 option – expect longer lead time.

**** Mounting accessories included, no separate order required.

MOUNTING ACCESSORIES

Pendant

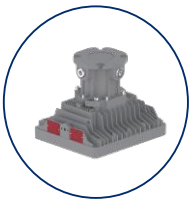

Ceiling

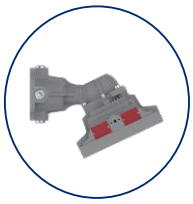

Wall

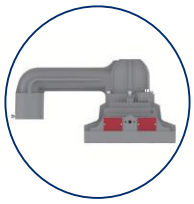

Stanchion

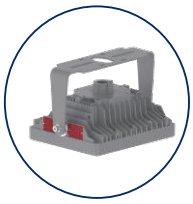

Yoke

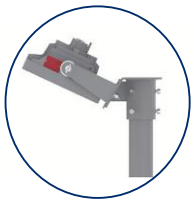

Pole

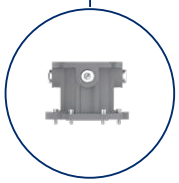

CEIL02

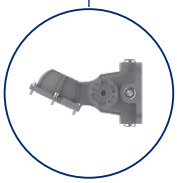

WL2503/WL9003

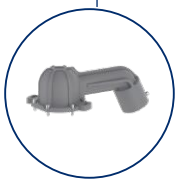

SN2506/SN2507
SN9006/SN9007

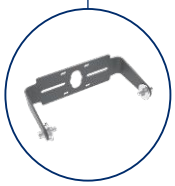

BLM2-YOKE

STAN01

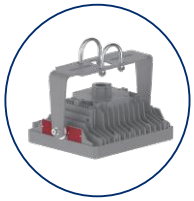

Pipe

Wall

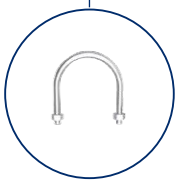

CLAMP01/CLAMP02

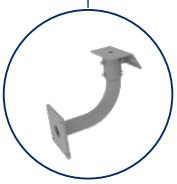

SW60-01

OTHER ACCESSORIES

RF003-A-01

RF003-B-01

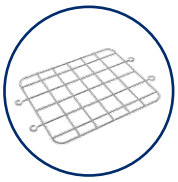
BLM-WGG

SFCB02

CLAMP01/CLAMP02

SW60-01

Part Number	Description	MPN Code
RF003-A-01	SUS304, 1 inch to 3/4 inch NPT Reducer for Pendant	210100106
RF003-B-01	SUS304, 1 inch to 3/4 inch NPT Reducer for Yoke & Ceiling & Wall	210100107
BLM-WGG	Wire Guard for Glass Lens, SUS304	210010093
SFCB02	Safety Cable Kit, SUS304	210010094
CLAMP01	Pipe Clamp Kit for Round Pole 1-7/8 inch OD (48 mm), SUS304	210010011
CLAMP02	Pipe Clamp Kit for Round Pole 2-3/8 inch OD (60 mm), SUS304	210010010
SW60-01	Slipfitter wall mount adapter, STAN01,SUS304, Powder-Coated Grey RAL 7037	210100185

REPLACEMENT PARTS (ORDERED SEPARATELY)

Category	Part Number	Description	MPN Code
Yoke(YKE)	BLM-YOKE	Yoke Mount, SUS304, Powder-Coated Grey RAL 7037	210010049
Pole(P1)	STAN01	Slip-Fit Stanchion Mount Kit for 2 inch Diameter (2-3/8 inch OD, 60mm OD) Poles, Non-Threaded, SUS304, Powder-Coated Grey RAL 7037	210010031
Ceiling(C1)	CEIL02	Ceiling Mount, Powder-Coated Grey RAL 7037	210010062
Stanchion(S1)	SN2506	Stanchion Mount, 25 Degree, NPT1-1/4, Power-Coated Grey RAL 7037	210010063
Stanchion(S2)	SN2507	Stanchion Mount, 25 Degree, NPT1-1/2, Power-Coated Grey RAL 7037	210010064
Stanchion(S3)	SN9006	Stanchion Mount, 90 Degree, NPT1-1/4, Power-Coated Grey RAL 7037	210010065
Stanchion(S4)	SN9007	Stanchion Mount, 90 Degree, NPT1-1/2, Power-Coated Grey RAL 7037	210010066
Wall(W1)	WL2503	Wall Mount, 25 Degrees, Powder-Coated Grey RAL 7037	210010067
Wall(W2)	WL9003	Wall Mount, 90 Degrees, Powder-Coated Grey RAL 7037	210010068
Driver	BLM-21-120-277-Driver	Replacement Driver Kit for BLM-21-120-277 Fixtures	303010016
	BLM-40-120-277-Driver	Replacement Driver Kit for BLM-40-120-277 Fixtures	303010017
	BLM-60-120-277-Driver	Replacement Driver Kit for BLM-60-120-277 Fixtures	303010018
	BLM-50-347-480-Driver	Replacement Driver Kit for BLM-50-347-480 Fixtures	303010019
Lens	CG001-A-01	Replacement Clear Glass Lens for BLM H1, BLM H2	303030001
	DG001-A-01	Replacement Diffuse Glass Lens for BLM H1/BLM H2	303030002

LUMEN TABLE

PN	Wattage (W)	CCT	CRI	Beam	Lens	Lumen Output (Lm)	Efficiency (Lm/W)
Voltage 100-277VAC 80 CRI • STANDARD							
BLM2-3L-120-277-5K-T2-H1-CG-GRY-PND	21	5000K	80	T2	Clear Glass	2,983	133
BLM2-3L-120-277-5K-T3-H1-CG-GRY-PND	21	5000K	80	T3	Clear Glass	2,842	127
BLM2-3L-120-277-5K-T5-H1-CG-GRY-PND	21	5000K	80	T5	Clear Glass	2,977	137
BLM2-3L-120-277-5K-T5-H1-DG-GRY-PND	21	5000K	80	T5	Diffuse Glass	2,615	117
BLM2-6L-120-277-5K-T2-H1-CG-GRY-PND	40	5000K	80	T2	Clear Glass	5,553	137
BLM2-6L-120-277-5K-T3-H1-CG-GRY-PND	40	5000K	80	T3	Clear Glass	5,226	128
BLM2-6L-120-277-5K-T5-H1-CG-GRY-PND	40	5000K	80	T5	Clear Glass	5,617	139
BLM2-6L-120-277-5K-T5-H1-DG-GRY-PND	40	5000K	80	T5	Diffuse Glass	4,915	121
BLM2-8L-120-277-5K-T2-H1-CG-GRY-PND	60	5000K	80	T2	Clear Glass	8,231	136
BLM2-8L-120-277-5K-T3-H1-CG-GRY-PND	60	5000K	80	T3	Clear Glass	7,752	129
BLM2-8L-120-277-5K-T5-H1-CG-GRY-PND	60	5000K	80	T5	Clear Glass	8,100	137
BLM2-8L-120-277-5K-T5-H1-DG-GRY-PND	60	5000K	80	T5	Diffuse Glass	7,274	129
Voltage 347-480VAC 80 CRI • STANDARD							
BLM2-7L-347-480-5K-T2-H1-CG-GRY-PND	50	5000K	80	T2	Clear Glass	6,974	134
BLM2-7L-347-480-5K-T3-H1-CG-GRY-PND	50	5000K	80	T3	Clear Glass	6,394	123
BLM2-7L-347-480-5K-T5-H1-CG-GRY-PND	50	5000K	80	T5	Clear Glass	6,945	136
BLM2-7L-347-480-5K-T5-H1-DG-GRY-PND	50	5000K	80	T5	Diffuse Glass	6,169	119
Voltage 100-277VAC 90 CRI							
BLM2-3L-120-277-5K-T2-H1-CG-GRY-PND CRI90	21	5000K	90	T2	Clear Glass	2,792	129
BLM2-3L-120-277-5K-T3-H1-CG-GRY-PND CRI90	21	5000K	90	T3	Clear Glass	2,664	123
BLM2-3L-120-277-5K-T5-H1-CG-GRY-PND CRI90	21	5000K	90	T5	Clear Glass	2,731	126
BLM2-3L-120-277-5K-T5-H1-DG-GRY-PND CRI90	21	5000K	90	T5	Diffuse Glass	2,344	109
BLM2-6L-120-277-5K-T2-H1-CG-GRY-PND CRI90	40	5000K	90	T2	Clear Glass	5,114	127
BLM2-6L-120-277-5K-T3-H1-CG-GRY-PND CRI90	40	5000K	90	T3	Clear Glass	4,973	124
BLM2-6L-120-277-5K-T5-H1-CG-GRY-PND CRI90	40	5000K	90	T5	Clear Glass	5,394	134
BLM2-6L-120-277-5K-T5-H1-DG-GRY-PND CRI90	40	5000K	90	T5	Diffuse Glass	4,322	108
BLM2-8L-120-277-5K-T2-H1-CG-GRY-PND CRI90	60	5000K	90	T2	Clear Glass	6,734	122
BLM2-8L-120-277-5K-T3-H1-CG-GRY-PND CRI90	60	5000K	90	T3	Clear Glass	6,506	119
BLM2-8L-120-277-5K-T5-H1-CG-GRY-PND CRI90	60	5000K	90	T5	Clear Glass	7,067	128
BLM2-8L-120-277-5K-T5-H1-DG-GRY-PND CRI90	60	5000K	90	T5	Diffuse Glass	5,920	101
Voltage 347-480VAC 90 CRI							
BLM2-7L-347-480-5K-T2-H1-CG-GRY-PND CRI90	50	5000K	90	T2	Clear Glass	5,767	121
BLM2-7L-347-480-5K-T3-H1-CG-GRY-PND CRI90	50	5000K	90	T3	Clear Glass	5,411	114
BLM2-7L-347-480-5K-T5-H1-CG-GRY-PND CRI90	50	5000K	90	T5	Clear Glass	5,959	125
BLM2-7L-347-480-5K-T5-H1-DG-GRY-PND CRI90	50	5000K	90	T5	Diffuse Glass	4,881	103

This table only lists part of the model lumen parameters, if you need other model parameters, please contact our sales.
Note: LXX# = nominal lumens. Verify lumen package before ordering.

A DIRECT RETROFIT FROM HID TO LED

The BLM series LED is easy to retrofit in the same configuration as your existing HID luminaires. For example, a 60-watt Block Mini (BLM-60) delivers virtually the same illumination as its equivalent 250 watt HPS luminaire while providing 80% reduction in energy costs and up to 130,000 hours of continuous operation.

MODELS	Lumen Output (Lm)	MH Equivalent (W)	HPS Equivalent (W)
BLM2-3L	2,977	100	150
BLM2-6L	5,617	150	200
BLM2-7L	6,945	175	225
BLM2-8L	8,100	200	250

THE RIGHT BEAM PATTERN FOR YOUR APPLICATION

RSL optic package is engineered to deliver maximum footcandles efficiently where you need them, without wasted light or overspill.
RSL offers complimentary lighting design services for our products using industry-leading AGI32 software, tailored for projects of all sizes in harsh and hazardous locations. We assist you in determining the number of fixtures needed, the types of lights to use, their optimal placement, and how to maximize energy savings—all within budget.
Simply fill out the form (https://dev.redskylighting.com/lighting-design) with a few key details, request a layout, and we'll bring your ideas to life within 2-5 business days.

Beam	NEMA/IESNA Type	Beam Description	Beam Projection Distance
30°	NEMA 3	Medium Narrow	
60°	NEMA 4	Medium	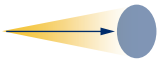
90°	NEMA 5	Medium Wide	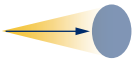
120°	NEMA 6	Wide	
T1	Type I	Asymmetric distributions, well suited for narrow areas, such as Conveyor belts, Aisleways, Catwalks, Loading docks and Tunnels.	
T2	Type II	Asymmetric distributions, well suited for narrow areas, such as roadways, paths and driveways.	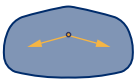
T3	Type III	Asymmetric distributions, well suited for site / area perimeters, wide roadways, and open areas.	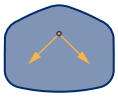
T5	NEMA 7 Type V (Square)	Very Wide：symmetrical pattern with excellent uniformity for large, open areas.	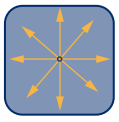

PHOTOMETRIC

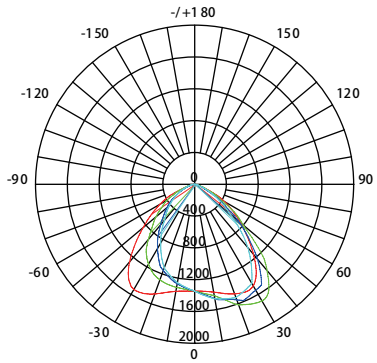

Type II

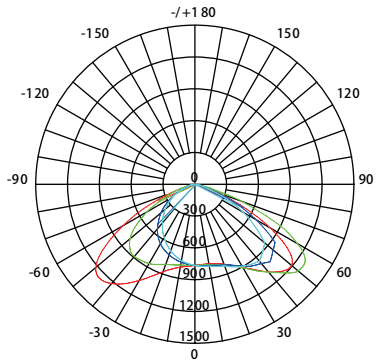

Type III

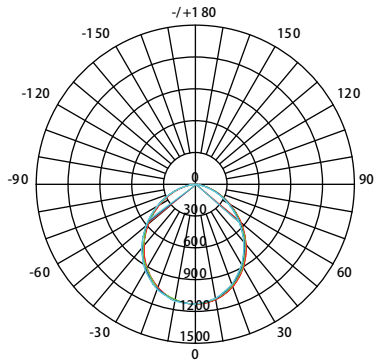

Type V (NEMA 6 - Wide)

DIMENSIONS

unit: in(mm)

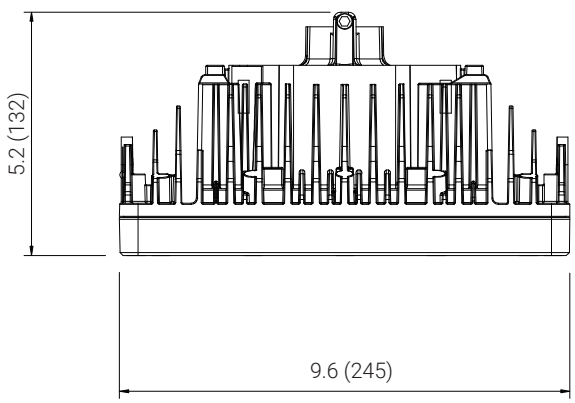

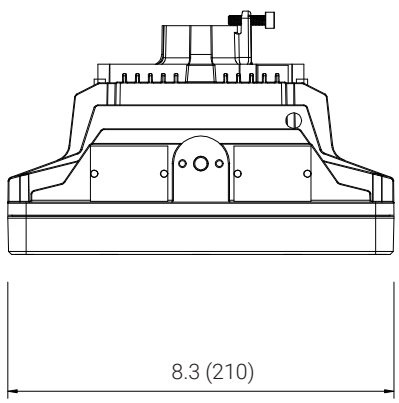

Pendant

DIMENSIONS

unit: in(mm)

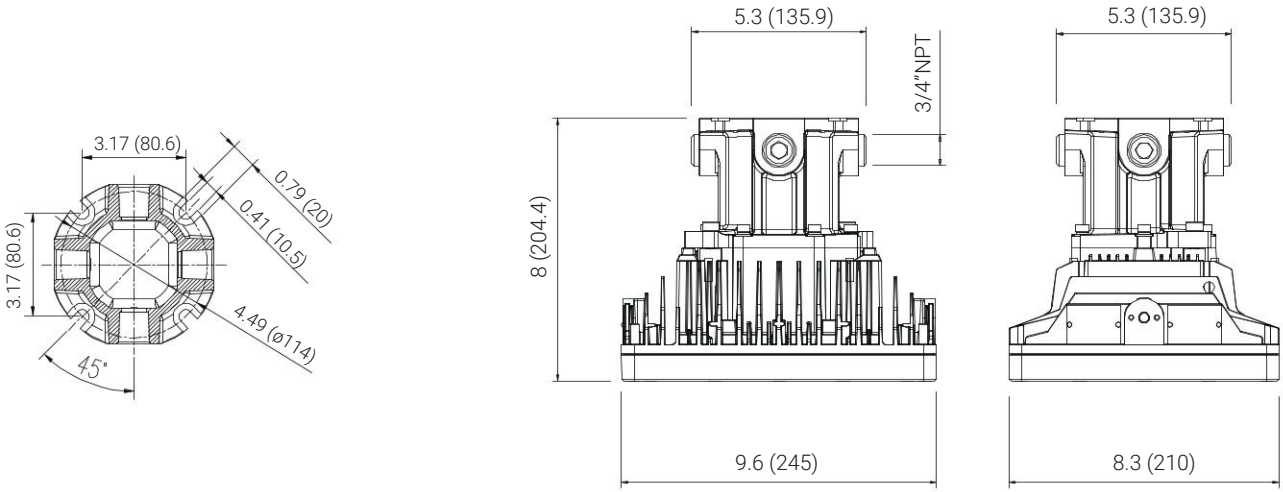

Ceiling

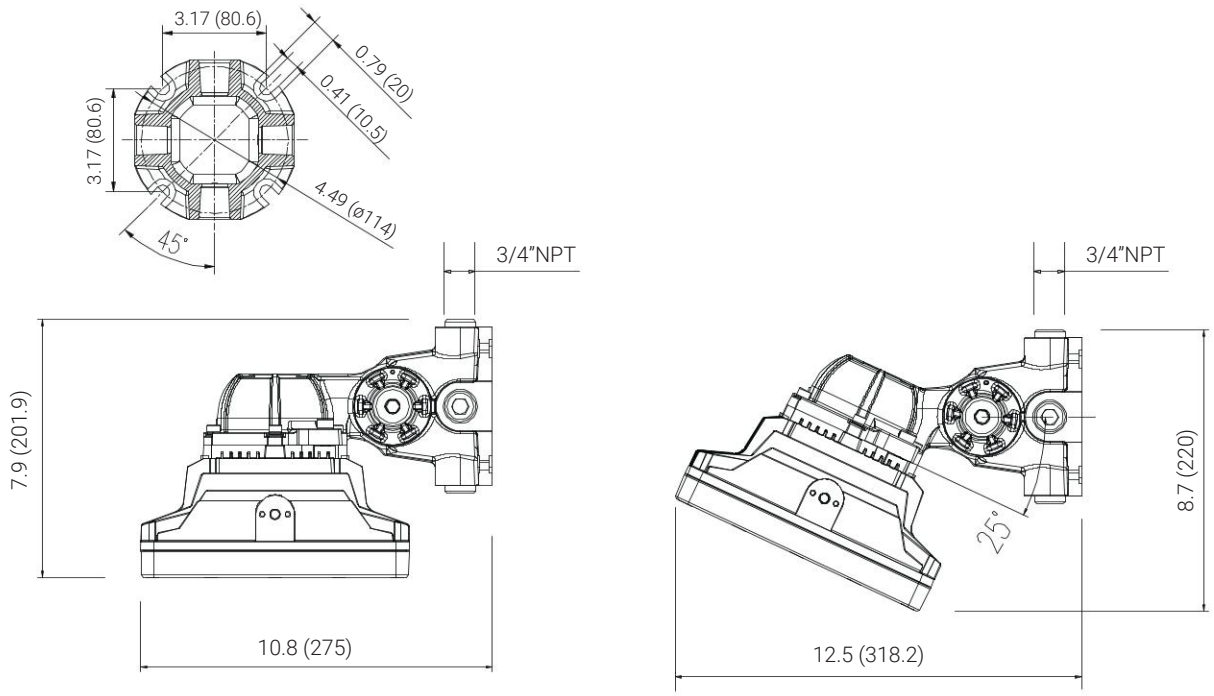

Wall

DIMENSIONS

unit: in(mm)

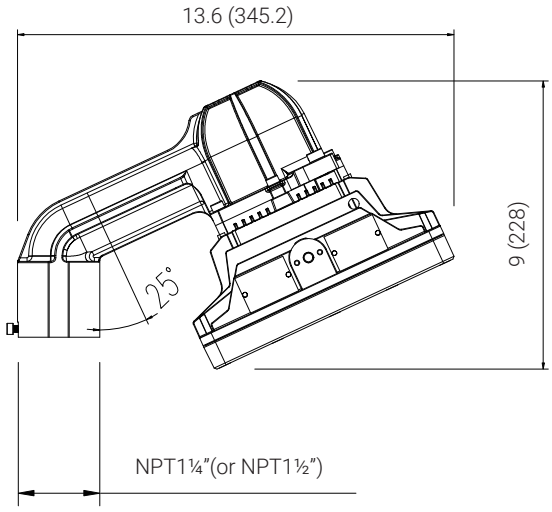

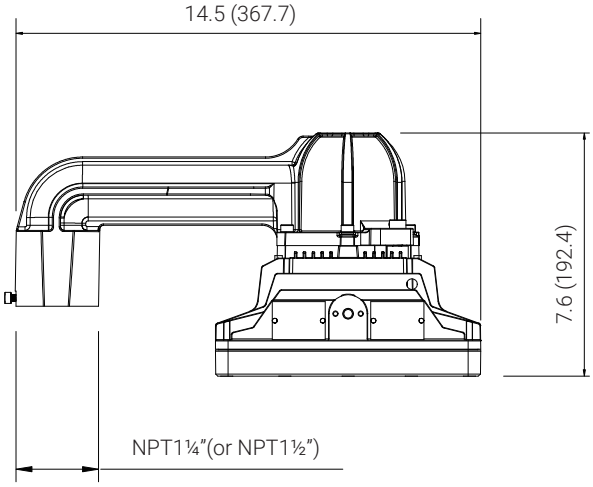

Stanchion

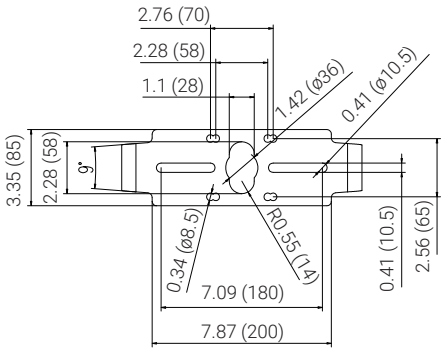

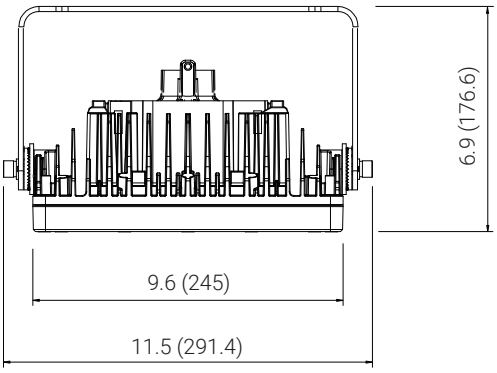

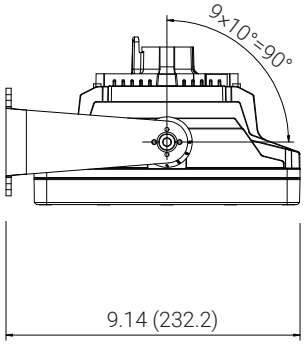

Yoke

DIMENSIONS

unit: in(mm)

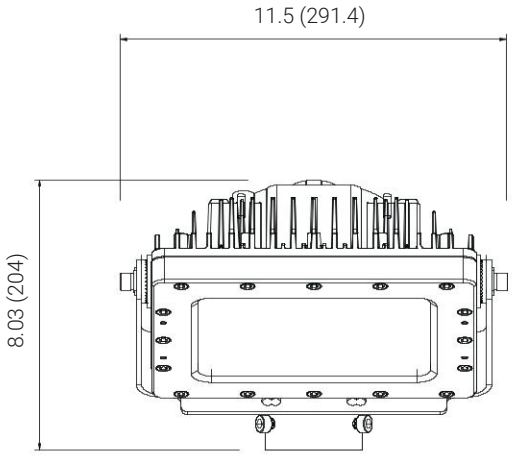

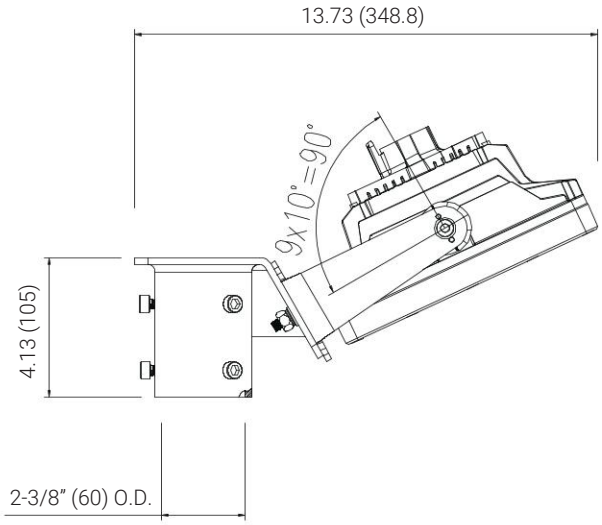

Pole

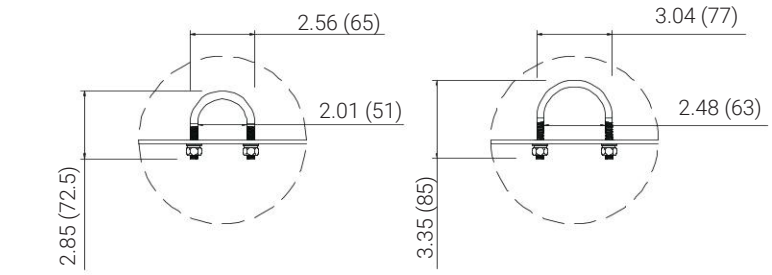

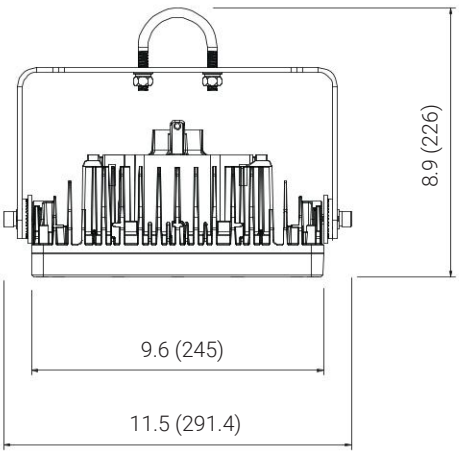

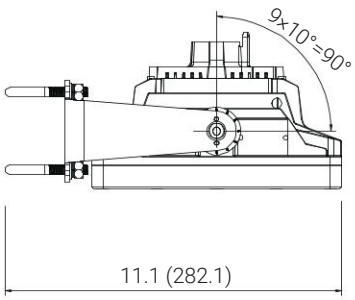

Pipe

DIMENSIONS

unit: in(mm)

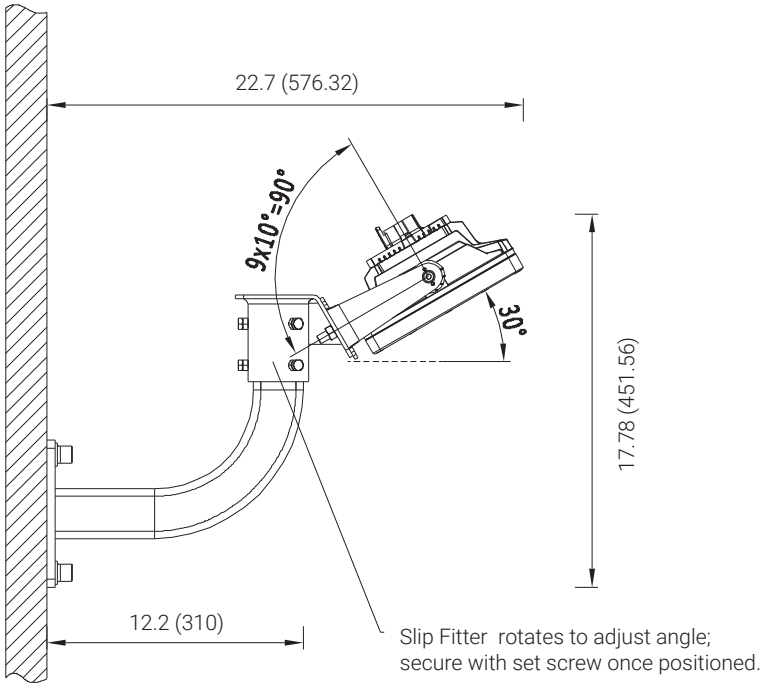

Wall

HAZARDOUS LOCATION LIGHTING BASICS

Atmosphere Groups

Substance	Hazard Class	Division Groups	Zone Groups
Acetylene	Class I Flammable Gases	Group A	IIC
Hydrogen		Group B	IIC
Ethylene		Group C	IIB
Propane		Group D	IIA
Methane		Group D	IIA[2]
Combustible Metal Dusts	Class II Combustible Dusts	Group E[1]	IIIC[3]
Combustible Carbonaceous Dust		Group F	IIIB[3]
Combustible Dusts not in Group E or F (Flour, Grain, Wood, Plastics, Chemicals)		Group G	IIIB[3]
Combustible Fibers and Flyings	Class III Fibers and Flyings	Not Applicable	IIIA[3]

Note 1: Group E is applicable to Class II, Division 1 only.
Note 2: Methane is a Group IIA Gas for non-mining applications.
Note 3: Group IIIA, IIIB and IIIC have not been adopted by the Canadian Electrical Code.

Temperature Classification

Max. Surface Temperatures	NEC®500 CEC®	NEC®505/IEC-Group II
450°C(842°F)	T1	T1
300°C(572°F)	T2	
280°C(536°F)	T2A	T2
260°C(500°F)	T2B	
230°C(446°F)	T2C	
215°C(419°F)	T2D	
200°C(392°F)	T3	T3
180°C(256°F)	T3A	
165°C(329°F)	T3B	
160°C(320°F)	T3C	
135°C(275°F)	T4	T4
120°C(248°F)	T4A	
100°C(212°F)	T5	T5
85°C(185°F)	T6	T6

Classification of Divisions and Zones

Hazard Level	Division Scheme	Zone Scheme	Definitions
Continuous Hazard	Division 1	Zone 0 / Zone 20	A place in which an explosive atmosphere is continually present
Intermittent Hazard		Zone 1 / Zone 21	A place in which an explosive atmosphere is likely to occur in normal operation
Hazard Under Abnormal Conditions	Division 2	Zone 2 / Zone 22	A place in which an explosive atmosphere is not likely to occur in normal operation, but may occur for short periods

IP Codes

1st No.	Solid Objects
0	No protection
1	Objects greater than 50mm
2	Objects greater than 12.5mm
3	Objects greater than 2.5mm
4	Objects greater than 1mm
5	Dust protected
6	Dust proof

2nd No.	Liquids
0	No protection
1	Vertically dripping
2	Dripping up to 15°
3	Limited spraying
4	Splashing from all directions
5	Hosing jets from all directions
6	Strong hosing jets from all directions
7	Temporary immersion
8	Continuous immersion
9	Steam-jet cleaning

IK Ratings

IK Code	Level of Protection Achieved
IK00	Not protected
IK01	Protected against 0.14 joules impact
IK02	Protected against 0.2 joules impact
IK03	Protected against 0.35 joules impact
IK04	Protected against 0.5 joules impact
IK05	Protected against 0.7 joules impact
IK06	Protected against 1 joules impact
IK07	Protected against 2 joules impact
IK08	Protected against 5 joules impact
IK09	Protected against 10 joules impact
IK10	Protected against 20 joules impact

RED SKY
SERIOUSLY SAFE LIGHTS™

1(262) 456-5002
contact@redskylighting.com
www.redskylighting.com

RED SKY LIGHTING LLC
9370 Pittsburgh Ave Rancho
Cucamonga, CA 91730, USA

Disclaimer

All product information is subject to change without notice.
Please contact Red Sky Lighting or your sales representative for the most up-to-date specifications.

Rev.1.1 08/26