HazLoc Environment LED Luminaire

General Safety Information

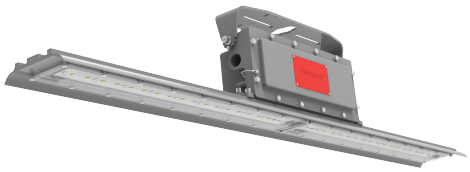

Picture is for illustration purpose only. Your model may vary

- To reduce the risk of death, personal injury or property damage from fire, electric shock, falling parts, cuts/abrasions and other hazards, please read all warnings and instructions included with and on the emergency luminaire box and all emergency luminaire labels.
- Before installing, servicing, or performing routine maintenance upon this equipment, please follow these general precautions.
- Commercial installation, service and maintenance of luminaires should be performed by qualified licensed electrician.
- DO NOT INSTALL DAMAGED PRODUCT!
- Make sure that the supply voltage is the same as the luminaire voltage.
- Do not install where the marked operating temperatures exceed the ignition temperatures of the hazardous atmosphere.
- Do not operate in ambient temperatures above those indicated on the luminaire nameplate.
- All gasket seals must be clean and undamaged.
- To ensure safety, a safety rope can be used to fix the luminaire before installation

WARNING:

RISK OF ELECTRICAL SHOCK

- Turn off electrical power at fuse or circuit breaker box before wiring emergency luminaire to the power supply.
- Turn off the power when you perform any maintenance.
- Verify that supply voltage is correct by comparing it with the luminaire label information.
- Make all electrical and grounded connections in accordance with the National Electrical Code and any applicable local code requirements.
- All wiring connections should be capped with UL Listed wire connectors.
- Luminaire must be supplied by a wiring system with an equipment grounding conductor.

CAUTION:

RISK OF INJURY

- Wear gloves and safety glasses at all times when removing luminaire from carton, installing servicing or performing maintenance.
- Avoid direct eye exposure to the light source while it is on.
- Account for small parts and destroy packing material, as these may be hazardous to children.

CAUTION:

RISK OF FIRE

- Keep combustible and other materials that can burn away from luminaire and lamp/lens.
- MIN 90°C SUPPLY CONDUCTORS.

RED SKY LIGHTING LLC
9370 Pittsburgh Ave Rancho Cucamonga, CA 91730, USA
+1 (262) 456-5002 / contact@redskylighting.com / www.redskylighting.com

HazLoc Environment LED Luminaire

Models:

LNR-2-3-4-5-6-7-8-9

2 - Wattage	40- 40W, 80 - 80W
3 - Voltage	120-277 - 120-277V AC
4- Color Temperature	3K - 3000K, 4K - 4000K,5K - 5000K, 57K- 5700K
5- Hazloc Rating	H2-C1D2 /C2D1/C3
6- Lens	CP - Clear PC, DP - Diffuse PC
7- Finish Color	GRY -Grey
8-Mounting	PND - Pendant, YKE - Yoke
9-Battery	EM-90 mins

- Ambient Temperature Range: -0°C (32°F) ~ +50 °C(122°F)
- Charge time 24h, Discharge time 1.5h, Rated load 12w

Model LNR Series is suitable for use in the following hazardous (classified) areas as defined by the National Electrical Code (NEC) and Canadian Electrical Code (CEC):

Hazardous Locations

Class l, Division 2, Groups A, B, C, D

Class ll, Division 1, Groups E, F, G

Class II Division 2, Groups F, G

Class III

Compliances

UL 844

UL 924

CSA C22.2 No. 137

CSA C22.2 No. 141

HazLoc Environment LED Luminaire

General Wiring Diagram

CAUTION: Turn off electrical power at fuse or circuit breaker box before wiringemergency luminaire to the power supply.

CAUTION: Prior to wiring the luminaire to the power supply, refer to the wiring diagram and connect the battery connector first.

Connecting luminaire to AC source supply:

All units must be individually connected to the AC supply.

White（N） = Neutral

Black（LE）= Hot

Brown（L）= Hot (To be connected to a switch for Luminaire ON/OFF control)

Yellow/Green（⏚） = Ground

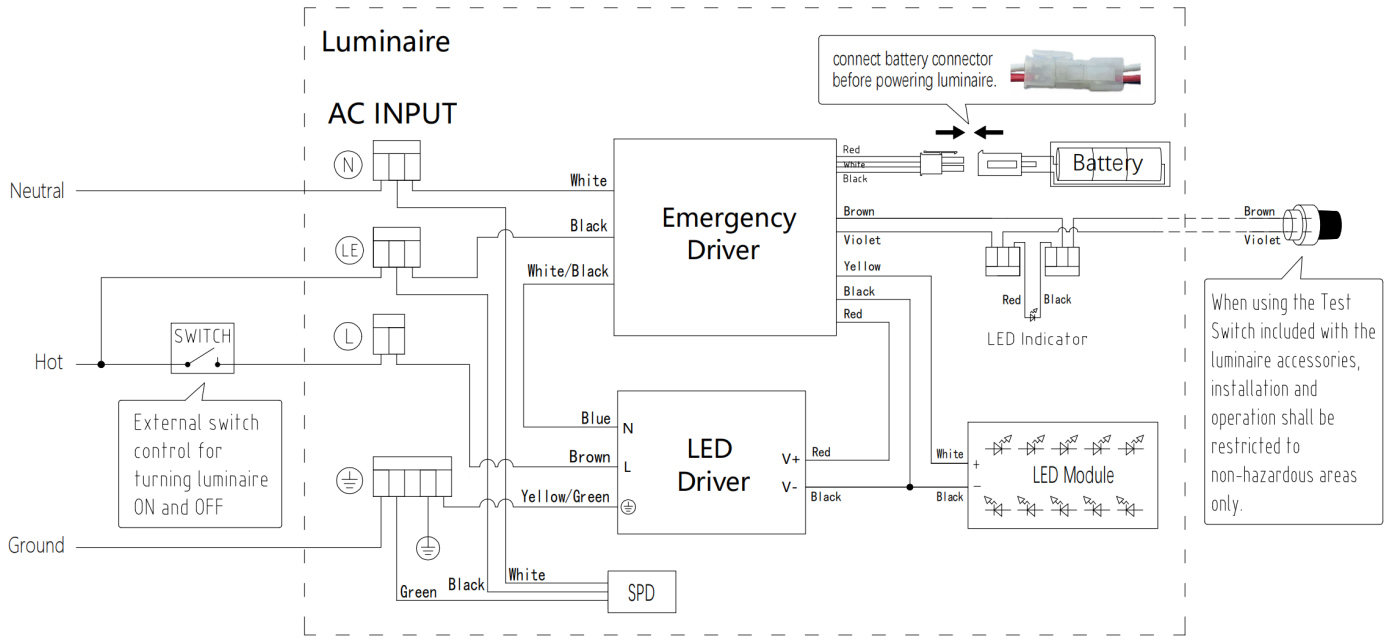

AC INPUT

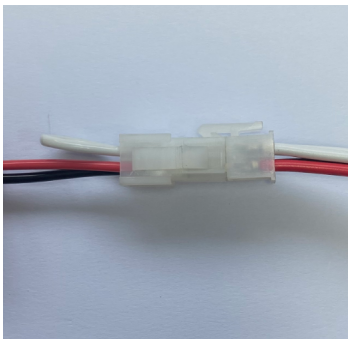

Battery connector

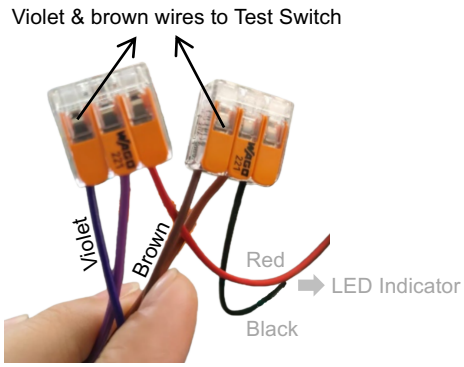

Test switch connector

HazLoc Environment LED Luminaire

Installation & Operation Electrical

Connection：

1.Loosen the twelve pcs of M6 hexagon bolts of Tank Cover at torque value 7 N-m.

2.The thread of entry hole of Tank is 3/4”NPT. Connect the Tank to suitable conduit.

3.Inset the wire from outside through the conduit and the entry hole of Tank, and then connect to wire connectors.

4.connect the branch circuit wires as following:

White（N） = Neutral

Black（LE）= Hot

Brown（L）= Hot (To be connected to a switch for Luminaire ON/OFF control)

Yellow/Green（⏚） = Ground

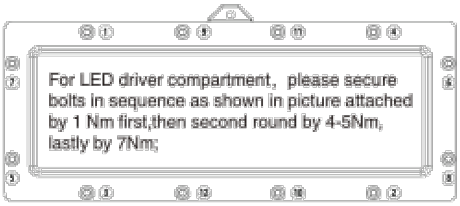

5. Refer to the wiring diagram for connecting the battery connector.

5. The remote test switch can be installed as required. Refer to the following precautions for its installation requirements.

6. Re-attach the Tank cover and tight it by twelve pcs of M6 hexagon bolts of Tank cover at torque value 7 N-m.

8.check the tightness of conduit and Tank cover.

INSTALLING THE REMOTE TEST SWITCH IN ORDINARY OR NON-HAZARDOUS LOCATION

This luminaire has provision to install a remote mounted test switch for the battery. The remote test switch shall comply with the following:

1.The remote test switch shall be certified for the area where it is to be installed (ordinary or non hazardous locations).

2. The remote test switch shall be a manually operated type.

3. The remote test switch shall be of:

a. operated type and of momentary-contact type, or

b. Maintained-break type that opens all ungrounded conductors and be accessible to authorized person.

4. The remote test switch shall be installed using acceptable wiring methods for the areas involved in accordance with the NEC.

5. The remote test switch shall be identified as to its function (i.e. – marked “Emergency Luminaire Test switch”).

6. when the remote test switch is installed, it has be connected such that when it is depressed it provides a transfer function, disconnects and isolates the normal input from the emergency input.

7. The rating of remote test switch is 3 vdc, 5mA; and incorporating with lead wiring 105℃min., 300 Vac min.

8. The remote test switch can be mounted up to 100 feet from fixture via 20AWG wire harness.

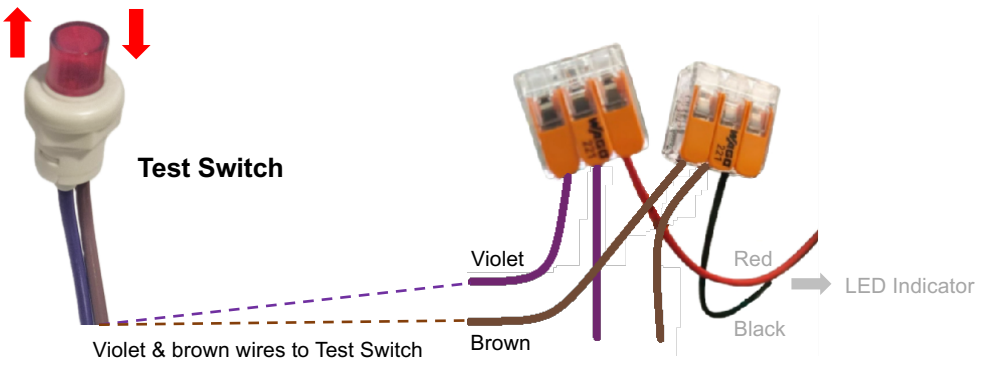

HazLoc Environment LED Luminaire

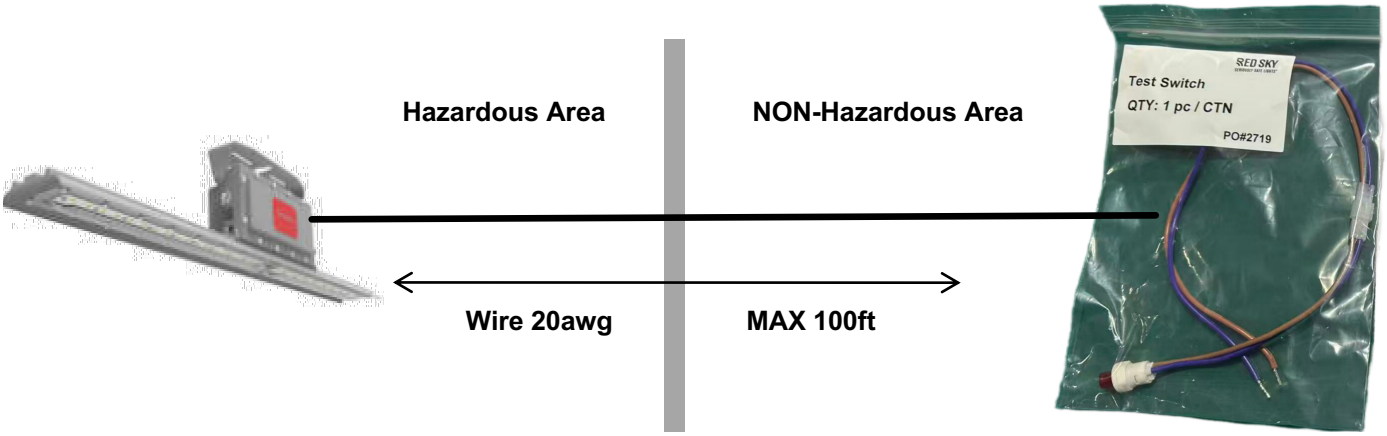

Note: If the installer uses the Test Switch supplied with the luminaire accessories, the button must be routed to a Non-Hazardous Area.

Emergency test function

When the luminaire is in normal lighting/off state (not in emergency lighting state/emergency lighting ended without power supply), press the test switch to enter emergency test mode, and release it to exit.

LED Indicator

When the red indicator light is steady on, it indicates the presence of alternating current (AC);
When the red indicator light is off, it means there is no alternating current (AC) and the emergency lighting will turn on.

LED Indicator

HazLoc Environment LED Luminaire

product size:

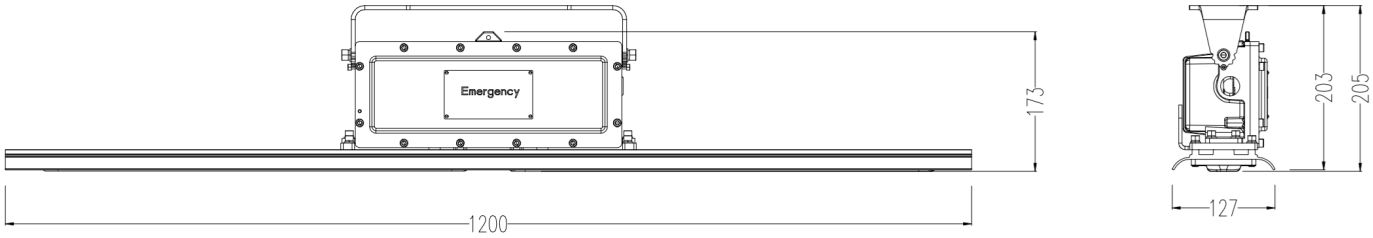

Fixture Size (L×W×H)

unit: in(mm)

LNR_80_EM 47.2x 5.0 x 6.8in (1200 x127 x173mm)

LNR_40_EM 23.6x 5.0 x 6.8in (600 x127 x173mm)

Installation:

1.Ceiling Mount

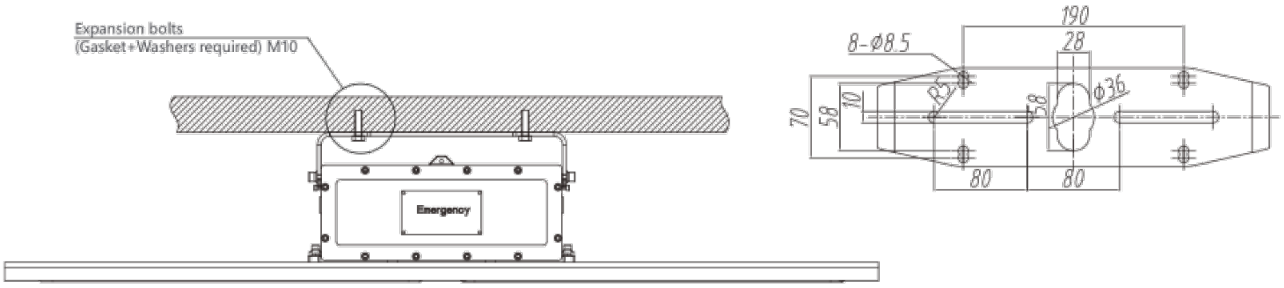

HazLoc Environment LED Luminaire

2.Wall Mount:

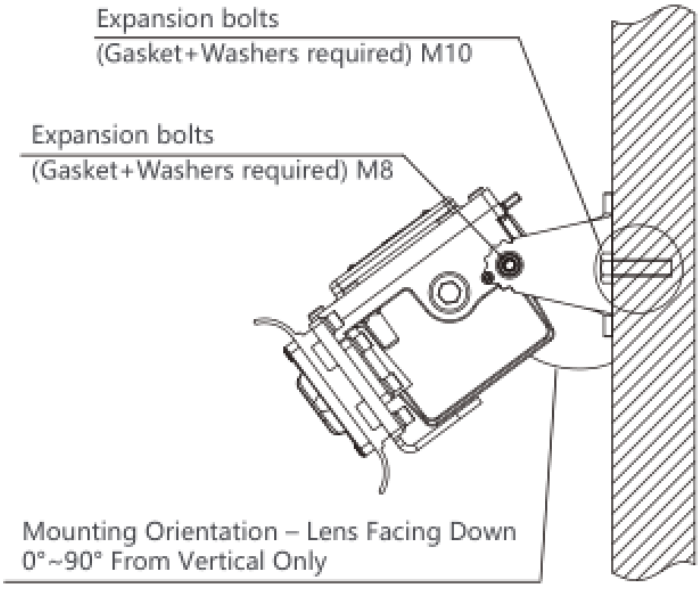

3.Stanchion Mount:

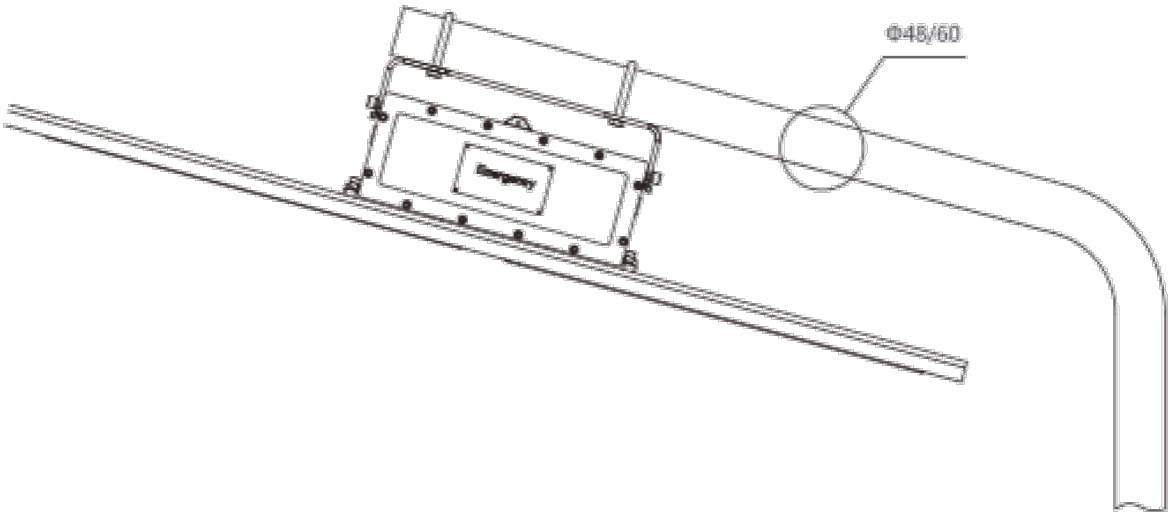

HazLoc Environment LED Luminaire

4.Chain Mount:

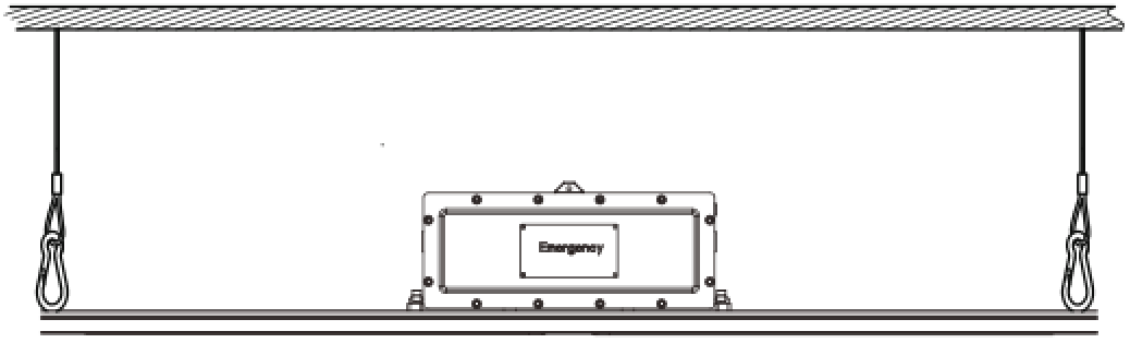

5.Chain Mount:

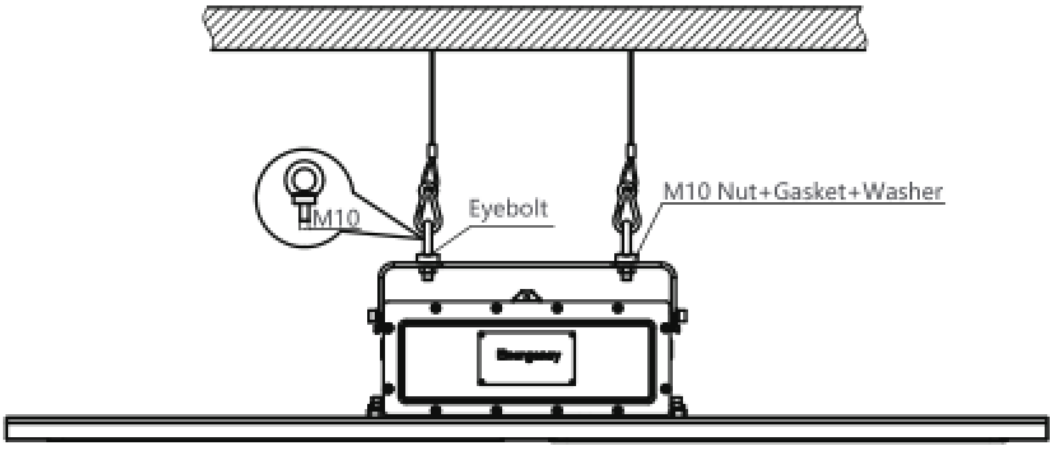

HazLoc Environment LED Luminaire

6.Pendant mount

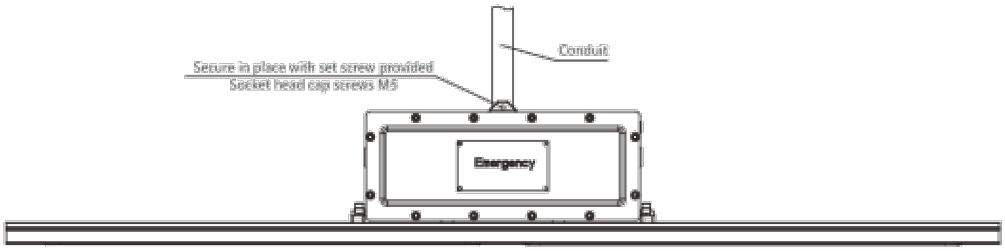

7. Safely Rope Install

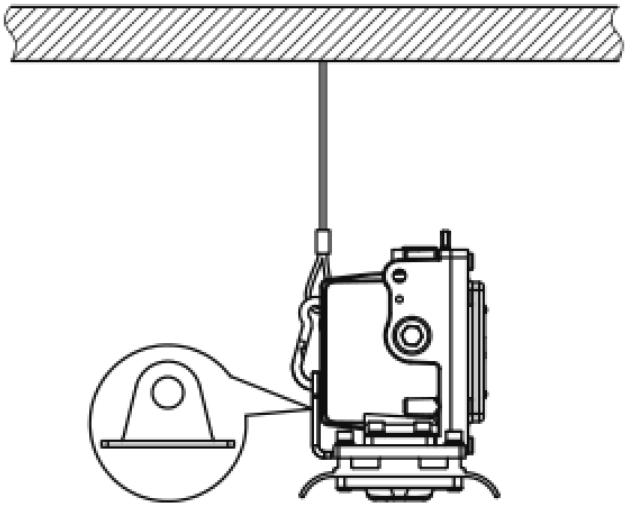

HazLoc Environment LED Luminaire

Servicing

- To avoid personal injury, disconnect power to the light and allow the unit to cool down before performing maintenance.
- Perform visual, electrical, and mechanical inspections on a regular basis. The environment and frequency of use should determine this. However, it is recommended that checks should be made at least once a year. Frequency of use and environment should determine this.
- The external lens should be cleaned periodically to ensure continued luminaire performance. Clean the lens with a clean, damp, non-abrasive, lint-free cloth. If this is not sufficient, use a mild soap or a liquid cleaner.
  Do not use an abrasive, strong alkaline or acid cleaner as damage may occur. Organic solvent is absolutely forbidden to soak the lens.
- Inspect the cooling fins on the luminaire to ensure that they are free of any contamination (i.e. excessive dust pile-up). Clean with a non-abrasive cloth if needed.
- Mechanically check to make sure all parts are properly assembled.
- Electrically check to make sure that all connections are clean and tight.

CAUTION: If the EM series luminaire has been stored for 3 months without installation or use, activate the emergency lighting function once until it shuts off automatically, then recharge it to 50 % capacity (12 h) to cycle the battery and safeguard its service life.

Housing

- Heavy-duty Die Casting Aluminum
- Shell surface of electrostatic spraying, Long lasting and Durable
- Exposed fasteners with quality stainless steel
- Excellent anti-corrosive property

Warranty

We warrant that each of our LED lighting luminaire (the "Product(s)") that are purchased while this Warranty is in effect will be free from defects in materials and workmanship for the period of time specified in the table below (the "Warranty Period"). The Warranty Period runs from the date of original purchase from its authorized distributor/dealer.

We will repair, or at our option, replace the defective product (exterior finish, housing and heat sinks, lens, LED engine, power supply) during the standard warranty period. This warranty applies only to the repair or replacement of the product and only when the product is properly handled, installed and maintained according to our instructions.

This warranty excludes defects resulting from improper installation, acts of God, fire, vandalism or civil disturbances, power surges or improper power supply, and corrosive environment installations.

This warranty does not cover equipment, systems or components from other manufacturers that the Purchaser uses in conjunction with the Product. Any repair, alteration or modification of the Product, including replacement of Product components with components of other manufacturers will void the warranty in its entirety.

Product	Models Covered by Warranty	Warranty Period
Linear Series Emergency Hazloc LED Luminaire	LNR EM Series	Fixture- Five(5) Years Battery- Three (3) Years

HazLoc Environment LED Luminaire

Safety Instructions:

An instruction manual shall be provided with all equipment. The manual shall include the following safety instructions verbatim.

IMPORTANT SAFEGUARDS

When using electrical equipment, basic safety precautions should always be followed including the following:

READ AND FOLLOW ALL SAFETY INSTRUCTIONS.

Do not mount near gas or electric heaters.

CAUTION -Replace Battery Only With Infinex Battery Model BA/96L/3.0AH Emergency Battery.

Equipment should be mounted in locations and at heights where it will not be subjected to tampering by unauthorized personnel.

The use of accessory equipment not recommended by the manufacturer may cause an unsafe condition. Do not use this equipment for other than its intended use.

SAVE THESE INSTRUCTIONS

Other instructions:

The manual shall include instructions for installation, operation, and maintenance recommended by the manufacturer. The instructions shall warn the user that all servicing should be performed by qualified personnel.

Max. mounting height:

80W, with 3000K /4000K/5000K/5700K color temperature and transparent PC, LEDs manufactured by LUMILEDS, model LUXEON 5050. Rated 23.22 Vdc, 1.97W, LEDs manufactured by OSRAM, model OSCONIQ P 2226. Rated1.68 Vdc,0.0006W. Max. mounting height: 9.1m (29.9 ft).

80W, with 3000K /4000K/5000K/5700K color temperature and diffuse PC, LEDs manufactured by LUMILEDS, model LUXEON 5050. Rated 23.22 Vdc, 1.97W, LEDs manufactured by OSRAM, model OSCONIQ P 2226. Rated1.68 Vdc,0.0006W. Max. mounting height: 9.3m 30.43ft).

40W, with 3000K /4000K/5000K/5700K color temperature and transparent PC, LEDs manufactured by LUMILEDS model LUXEON 5050. Rated 23.22 Vdc,1.97W, LEDs manufactured by OSRAM, model OSCONIQ P 2226. Rated 1.68 Vdc, 0.0006W. Max. mounting height: 9.3m (30.54 ft).

40W, with 3000K /4000K/5000K/5700K color temperature and diffuse PC, LEDs manufactured by LUMILEDS model LUXEON 5050. Rated 23.22 Vdc,1.97W, LEDs manufactured by OSRAM, model OSCONIQ P 2226. Rated 1.68 Vdc, 0.0006W. Max. mounting height: 9.1m(30.02ft).