HazLoc LED Luminaire

Warranty

We warrant that each of our LED lighting luminaire (the "Product(s)") that are purchased while this Warranty is in effect will be free from defects in materials and workmanship for the period of time specified in the table below (the "Warranty Period"). The Warranty Period runs from the date of original purchase from its authorized distributor/dealer.

We will repair, or at our option, replace the defective product (exterior finish, housing and heat sinks, lens, LED engine,power supply) during the standard warranty period. This warranty applies only to the repair or replacement of the product and only when the product is properly handled, installed and maintained according to our instructions.

This warranty excludes defects resulting from improper installation, acts of God, fire, vandal-ism or civil disturbances, power surges or improper power supply, and corrosive envir onment installations.

This warranty does not cover equipment, systems or components from other manufacturers that the Purchaser uses in conjunction with the Product. Any repair, alteration or modification of the Product, including replacement of Product components with components of other manufacturers will void the warranty in its entirety.

Product	Models Covered by Warranty	Warranty Period
Block-Mini Series Hazloc LED Luminarie	BLM Series	Driver- Five (5) Years LEDS- Ten (10) Years

HazLoc LED Luminaire

General Safety Information

To reduce the risk of death, personal injury or property damage from fire, electric shock, falling parts, cuts/abrasions, and other hazards, read all warnings and instructions included with and on the luminaire box and all luminaire labels.

Before installing, servicing, or performing routine maintenance upon this equipment, follow these general precautions.
Commercial installation, service and maintenance of luminaires should be performed by a qualified licensed electrician.
DO NOT INSTALL DAMAGED PRODUCT!
This luminaire is intended to be connected to a properly installed and grounded UL listed junction box.
Make sure that the supply voltage is the same as the luminaire voltage.
Do not install where the marked operating temperatures exceed the ignition temperatures of the hazardous atmosphere.
Do not operate in ambient temperatures above those indicated on the luminaire nameplate.
All gasket seals must be clean and undamaged.

Picture is for illustration purposes only.
Your model may vary

WARNING:
RISK OF ELECTRICAL SHOCK
Turn off electrical power at fuse or circuit breaker box before wiring luminaire to the power supply.
Turn off the power when you perform any maintenance.
Verify that supply voltage is correct by comparing it with the luminaire label information.
Make sure all electrical and grounded connections in accordance with the National Electrical Code and any applicable local code requirements and Hazloc requirements and suitable for wiring systerm..
All wiring connections should be capped with UL approved wire connectors.
Luminaire must be supplied by a wiring system with an equipment grounding conductor.

CAUTION:
RISK OF INJURY
Wear gloves and safety glasses at all times when removing luminaire from carton, installing, servicing or performing maintenance.
Avoid direct eye exposure to the light source while it is on.
Account for small parts and destroyed packing material, as these may be hazardous to children.

CAUTION:

Keep combustible and other materials that can burn away from luminaire and lamp/lens.
MIN 90°C SUPPLY CONDUCTORS.

Model BLM Series is suitable for use in the following hazardous (classified) areas as defined by the National Electrical Code (NEC) and Canadian Electrical Code (CEC):

With PC cover suitable for Class Ⅰ, Division 2 and Class II、Class III
For Class I, Division 1 Luminaires, suitable for locations having deposits of readily combustible paint residues

Hazardous Locations
Class I , Division 1, Groups B, C, D
Class I, Division 2, Groups A, B, C, D
Class II, Division 1, Groups E, F, G
Class II, Division 2, Groups F, G
Class III , Division 1

Refer to the luminaire nameplate for specific classification information, maximum ambient temperature suitability and corresponding operating temperature (T-Code).

HazLoc LED Luminaire

Models:

BLM-2-3-4-5-6-7-8-9

2 – Wattage	21 - 21W, 40 - 40W, 50 - 50W, 60 - 60W
3 – Voltage	120-277 - 120-277V AC, 347-480 - 347-480V AC
4 – Color Temperature	5K - 5000K, 4K - 4000K, 3K - 3000K
5 – Beam Angle	T2 - Type II, T3 - Type III, T5 - 110° (non-optic)
6 – Hazloc Rating	H1 - C1D1 / C1D2 / C2D1 / C3, H2 - C1D2 / C2D1 / C3
7 – Lens	CG - Clear Glass, DG - Diffuse Glass, DP - Diffused Polycarbonate
8 – Finish Color	GRY – Grey
9 – Mounting	PND – Pendant, YKE – Yoke,
	CEIL – Ceiling, SN25 - Stanchion 25°, SN90 - Stanchion 90°, WL25 - Wall 25°, WL90 - Wall 90°*
	*(Not for luminaires marked for Class I, Division 1)

Operating characteristic:

Rated voltage:	Power	Model	Ambient Temp.	
			Class I , Division 1, Groups B, C, D Class I, Division 2, Groups A, B, C, D	Class II, Division 1, Groups E, F, G
120-277 Vac	21W	**BLM-21**	-40℃ (-40℉) ~+65℃ (149℉)	65℃ (149℉)
	40W	**BLM-40**		
	60W	**BLM-60**	-40℃ (-40℉) ~+64℃ (147.2℉)	64℃ (147.2℉)
347-480 Vac	50W	**BLM-50**	-40℃ (-40℉) ~+65℃ (149℉)	65℃ (149℉)

Block-Mini Series

Servicing

To avoid personal injury, disconnect power to the light and allow the unit to cool down before performing maintenance.

Perform visual, electrical, and mechanical inspections on a regular basis. The environment and frequency of use should determine this. However, it is recommended that checks should be made at least once a year.

The external Lens should be cleaned periodically to ensure continued luminaire performance. Clean the Lens with a clean, damp, non-abrasive, lint-free cloth. If this is not sufficient, use a mild soap or a liquid cleaner. Do not use an abrasive, strong alkaline or acid cleaner as damage may occur.

Inspect the cooling fins of the luminaire to ensure that they are free of any contamination (i.e. excessive dust build-up). Clean with a non-abrasive cloth if needed.

Mechanically check to make sure all parts are properly assembled.

Electrically check to make sure that all connections are clean and tight.

HazLoc LED Luminaire

Wall 25°/ Wall 90° :

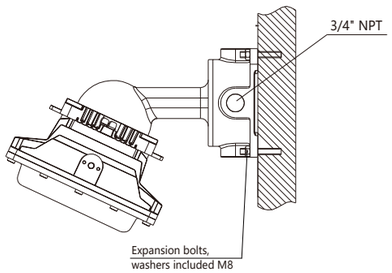

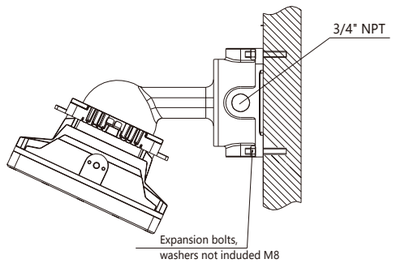

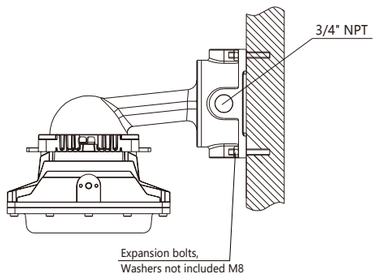

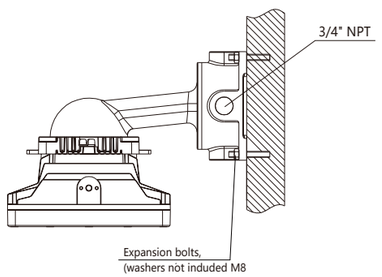

Stanchion 25°/ Stanchion 90° :

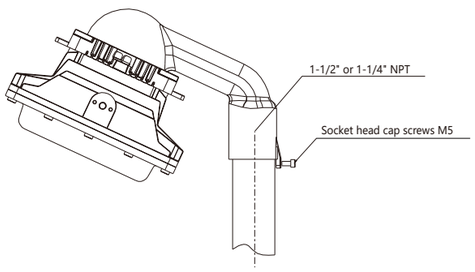

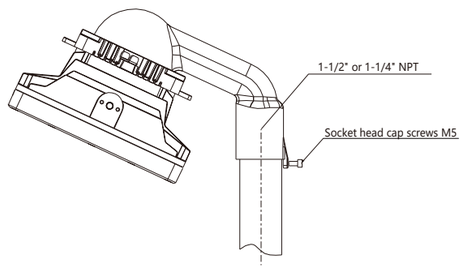

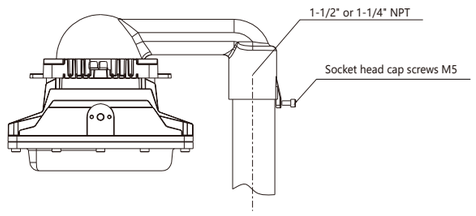

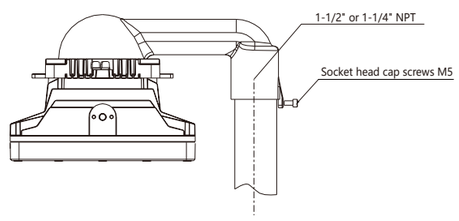

HazLoc LED Luminaire

General Wiring Diagram

CAUTION: Turn off electrical power at fuse or circuit breaker box before wiring luminaire to the power supply.

Connecting panels to AC source supply: All units must be individually connected to the AC supply.

Black = Line
White = Neutral
Green = Ground

Dimming control wire: GRAY(NEG)
PURPLE(0~10V Input)
YELLOW(+10V Output)

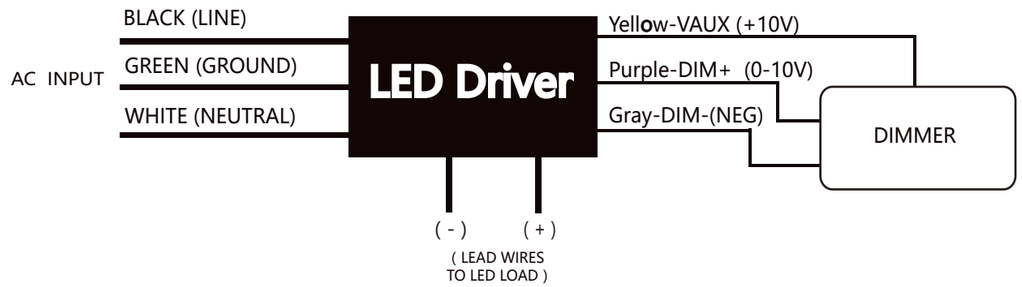

Installation & Operation

Note:

1. The minimum length of all integral luminaire field wiring leads provided is 18 inches (457.2 mm) extended outside of the field wiring conduit opening for all mounting means. All wiring connections are to be made outside of the luminaire without opening or disassembling of any parts of the luminaire enclosure and mounting means.
2. For luminaire with trunnion mount bracket "Mounting Orientation – Lens Facing Down 0°~90° From Vertical Only" .
3. The dimming wire and brunch circuit should be separated in different wiring compartment.

Electrical Connection:

1. Introduce the wires of branch circuit as following:
   Black-wire connects to Line
   White-wire connects to Neutral
   Green-wire connects to Ground
2. The thread of entry hole of housing is 3/4 NPT. Attach the housing to suitable conduit.

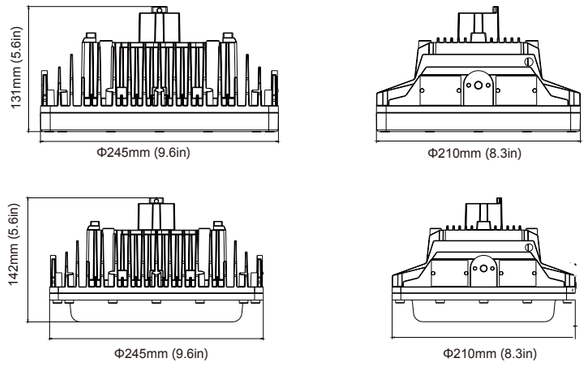

HazLoc LED Luminaire

Installation:

The following installation is applicable to
Class I Division 1, Groups B, C, D
Class I Division 2, Groups A, B, C, D
Class II Division 1, Groups E, F, G
Class II Division 2, Groups F, G
Class III Division 1

Pendant :

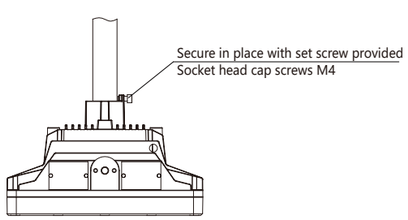

Yoke (Ceiling):

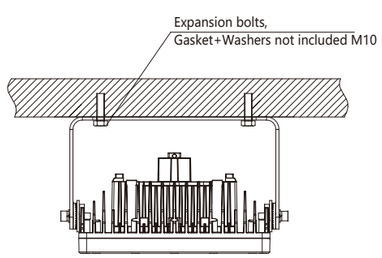

Yoke (Wall):

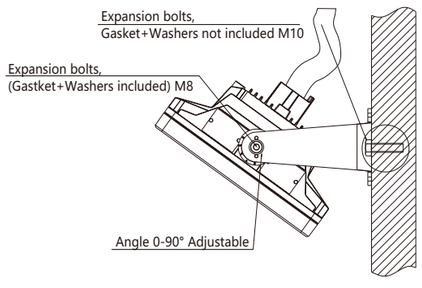

Yoke with U bolts (Pole),
(Not suitable for paint spray booth)

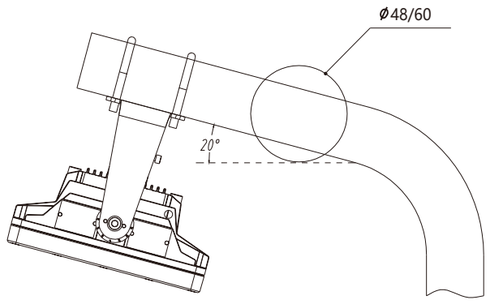

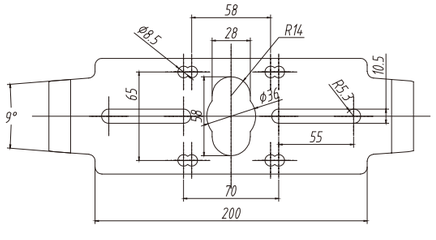

HazLoc LED Luminaire

The following installation is only applicable to
Class I Division 2, Groups A, B, C, D
Class II Division 1, Groups E, F, G
Class II Division 2, Groups F, G
Class III Division 1

Pendant :

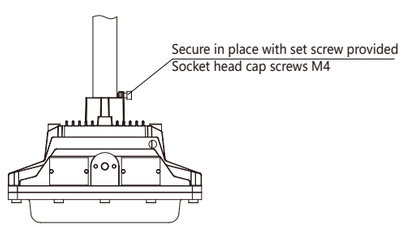

Yoke (Ceiling):

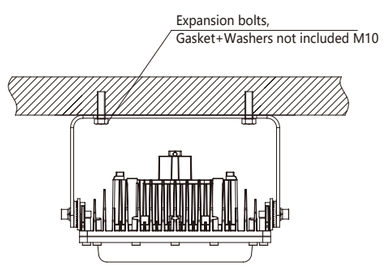

Yoke (Wall):

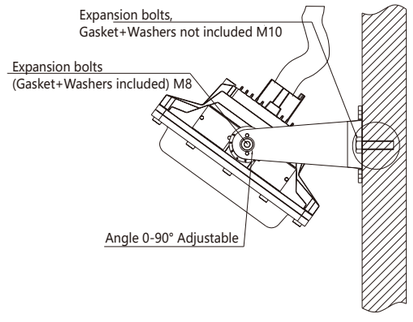

Yoke with U bolts (Pole)

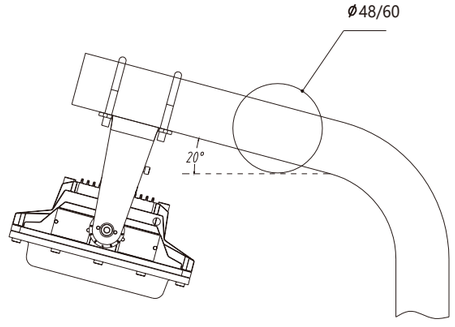
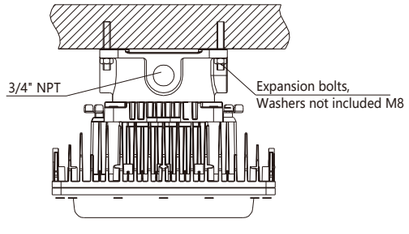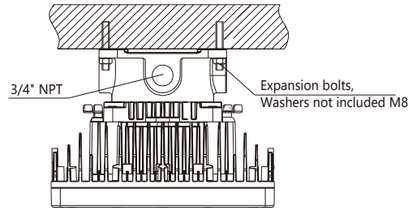
Ceiling: