Harsh Environment Led Luminaire

General Safety Information

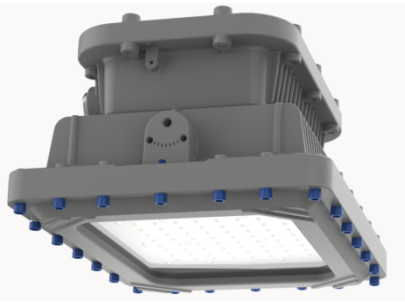

Picture is for illustration purposes only.
Your model may vary

- To reduce the risk of death, personal injury or property damage from fire, electric shock, falling parts, cuts/abrasions and other hazards, please read all warnings and instructions included with and on the fixture box and all fixture labels.
- Before installing, servicing, or performing routine maintenance upon this equipment, please follow these general precautions.
- Commercial installation, service and maintenance of luminaires should be performed by a qualified licensed electrician.
- DO NOT INSTALL DAMAGED PRODUCT!
- This fixture is intended to be connected to a properly installed and grounded UL listed junction box.
- Make sure that the supply voltage is the same as the luminaire voltage.
- Do not operate in ambient temperatures above those indicated on the luminaire nameplate.
- All gasket seals must be clean and undamaged.

WARNING:

RISK OF ELECTRICAL SHOCK

- Turn off electrical power at fuse or circuit breaker box before wiring fixture to the power supply.
- Turn off the power when you perform any maintenance.
- Verify that supply voltage is correct by comparing it with the luminaire label information.
- Make all electrical and grounded connections in accordance with the National Electrical
- Code and any applicable local code requirements.
- All wiring connections should be capped with UL approved wire connectors.
- Luminaire must be supplied by a wiring system with an equipment grounding conductor.

CAUTION:

RISK OF INJURY

- Wear gloves and safety glasses at all times when removing luminaire from carton, installing, servicing or performing maintenance.
- Avoid direct eye exposure to the light source while it is on.
- Account for small parts and destroy packing material, as these may be hazardous to children.

CAUTION:

RISK OF FIRE

- Keep combustible and other materials that can burn away from luminaire and lamp/lens.
- MIN 90°C SUPPLY CONDUCTORS.

Models:

BLK2-1-2-3-4-5-6-7-8

1= Wattage (80=80W, 100=100W, 120=120W, 150=150W)

2= Voltage (100-277=100-277V AC, 347-480=347-480V AC)

This fixture is suitable for use in the following Harsh (classified) areas as defined by the National Electrical Code (NEC) and Canadian Electrical Code (CEC):

Harsh Locations

Compliances
UL 1598
UL 1598A
CSA C22.2 No. 250.0-08

Environmental Ratings
Suitable for wet location
IP66

Refer to the luminaire name-plate for specific classification information, maximum ambient temperature suitability and corresponding operating temperature.

Harsh Environment Led Luminaire

3= CCT (5K=5000K, 4K=4000K, 3K=3000K)
4= Beam (25=25°, 60=60°, 120=120°)
5= Rating (HS - UL1598/A)
6= Lens (CG=Clear Glass, DG= Diffused Glass)
7= Color (GRY=Grey)
8= Mounting (PND=Pendant, YKE=Yoke*)
9= CRI (BLANK – 80 CRI Standard, CRI70 – 70 CRI, CRI90 – 90 CRI**)

* BLK-YOKE pre-installed, contact sales for other Yoke options.
** CRI90 expects longer lead time

Operating characteristic:

- Rated Voltage: 100-277 Vac or 347-480 Vac, 50/60Hz
- Ambient Temperature Range: -40°F ~ +140°F (-40°C ~ +60°C)

CAUTION:

Turn off electrical power at fuse or circuit breaker box before wiring fixture to the power supply.

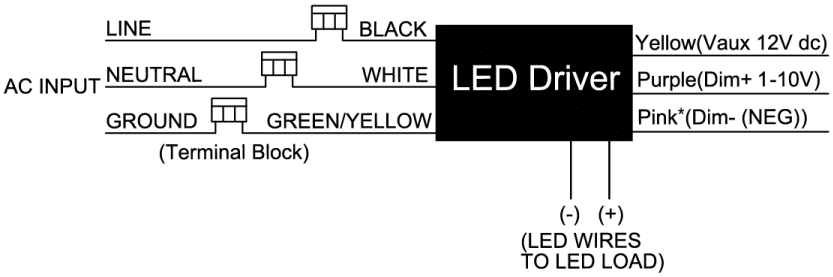

All units must be individually connected to the AC supply.

Black = Line
White = Neutral
Green = Ground

Dimming control wire: Yellow =Vaux 12V dc
Purple = Dim+ 1~10V input
Pink*= Dim- (NEG)

* You might receive the lead in grey from a previous version.

Installation

Electrical Connection:

1. Connect field supply wires to luminaire wire leads (or Wago connectors).
2. Wire per wiring diagram and per required electrical codes.
3. Close the driver housing, making sure that all wires are safely inside the box.
4. Check the tightness of conduit and Tank Cover.
5. Turn power on.

Harsh Environment Led Luminaire

Product Dimensions:

Unit: in(mm)

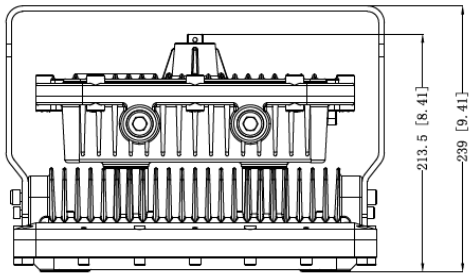

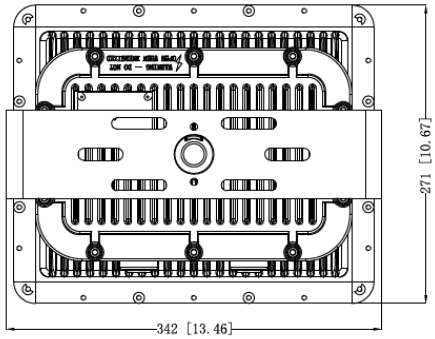

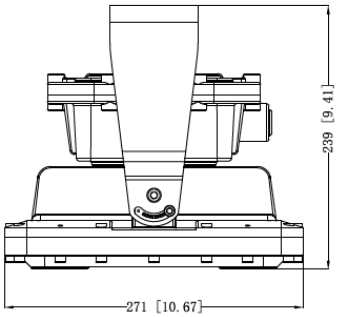

1. Pendant

Step 1. Loosen the ten (M6) hexagon socket head cap screws of the hood with torque value (7 N-m).

Step 2. Thread the pendant hood onto the NPT 3/4 inch conduit. Tighten the (M5) set-screw with torque value (4 N-m)

Step 3. Wire per wiring diagram. Close driver housing. Tighten the ten closing screws (M6) to (7 N-m).

Note: All installation must refer to Red Sky Lighting " NPT Assembly Instructions" to prevent water leakage

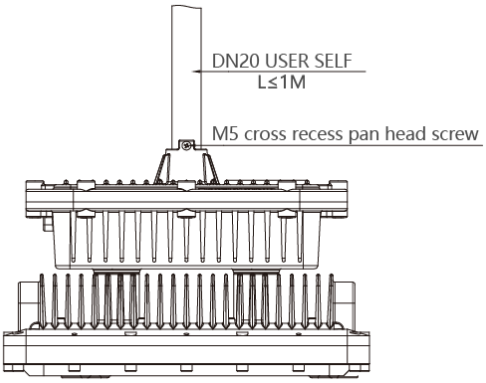

Harsh Environment Led Luminaire

2. Yoke (Ceiling / Wall / Floor)

Step 1. Secure the yoke and fixture with 4 (M10) expansion bolts (not provided) directly to a structural member. Adjust the angle of the yoke and fix the position by tightening the two (M6) and two (M8) side screws (provided).

Step 2. Loosen the ten (M6) hexagon socket head cap screws of the hood with torque value (7 N-m).

Step 3. Wire per wiring diagram. Close driver housing. Tighten the ten closing screws (M6) to (7 N-m).

Note: All installation must refer to Red Sky Lighting " NPT Assembly Instructions" to prevent water leakage.

Ceiling Type:

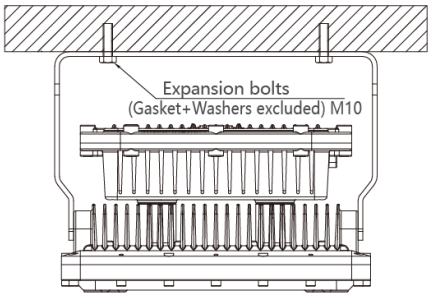

Wall Type:

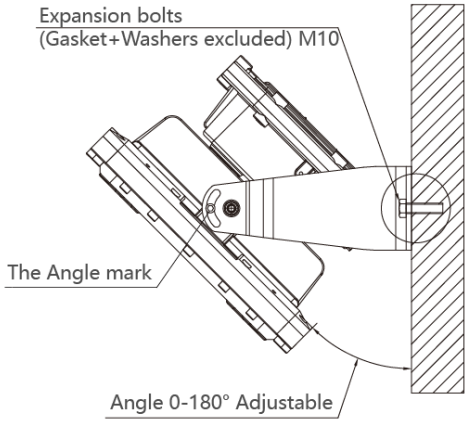

Floor Type:

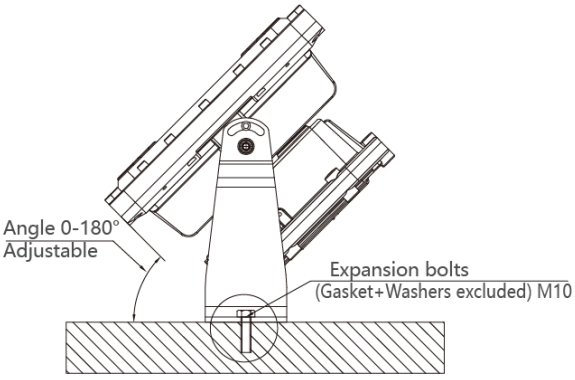

Harsh Environment Led Luminaire

3.Stanchion

Step 1. Measure and verify pole outer diameter. Place Slip fitter on the 2-3/8” O.D. (60mm) Tenon. Tighten all 6 (M8x20mm) set screws. Pull cable through center hole.

Step 2. Place and hold the fixture with yoke onto Slip Fitter. Secure with the 2 (M10) hex bolts and washers on the top of the Slip fitter. This may require holding set screws In place with Allen wrench.

Step 3. Loosen the Locking Bolt of the yoke and adjust the angle of the fixture as desired. Tighten the Locking Bolt.

Step 4. Wire to luminaire according to luminaire installation manual.

Note: All installation must refer to Red Sky Lighting " NPT Assembly Instructions" to prevent water leakage

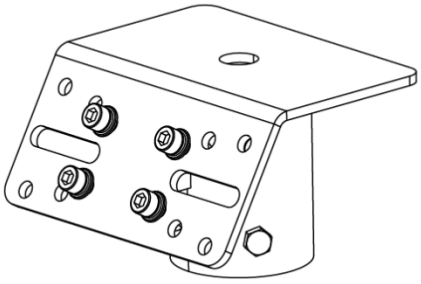

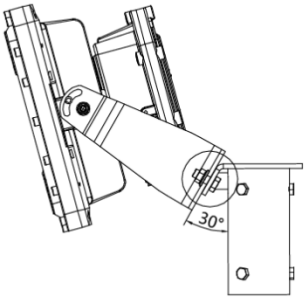

LENS WIRE GUARD INSTALLATION (kit sold separately)

Step 1. Loosen the 4 (M6) hexagon socket head cap screws of the lens cover with torque value 7 N-m.

Step 2. Locate and center the guard to the outside of the fixture housing with the (4x) clips aligned with the holes of the screws.

Step 3. Install and tighten the 4 (M6) screws through the mounting clips and into the housing screw holes torquing to (7 N-m).

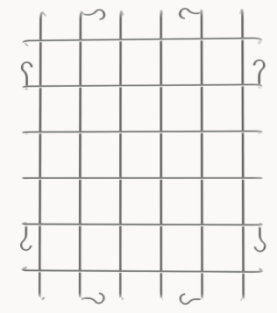

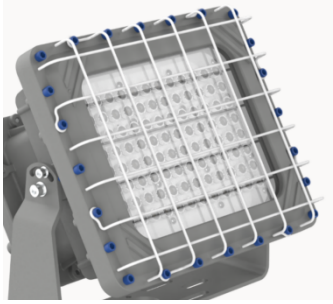

SAFETY CABLE KIT INSTALLATION (kit sold separately)

Step 1. Install Secondary Retention Cable to secure location per standards.

Step 2. Secure Carabiner through thru-holes (Dia-12mm) on top of fixture.

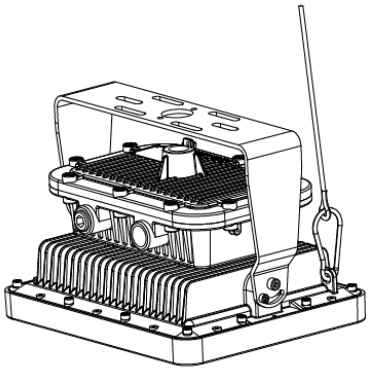

Harsh Environment Led Luminaire

Servicing

To avoid personal injury, disconnect power to the light and allow the unit to cool down before performing maintenance.
Perform visual, electrical, and mechanical inspections on a regular basis. The environment and frequency of use should determine this. However, it is recommended that checks should be made at least once a year. Frequency of use and environment should determine this.
The external glass should be cleaned periodically to ensure continued luminaire performance. Clean the glass with a clean, damp, non-abrasive, lint-free cloth. If this is not sufficient, use a mild soap or a liquid cleaner. Do not use an abrasive, strong alkaline or acid cleaner as damage may occur.
Inspect the cooling fins on the luminaire to ensure that they are free of any contamination (i.e. excessive dust build-up). Clean with a non-abrasive cloth if needed.
Mechanically check to make sure all parts are properly assembled.
Electrically check to make sure that all connections are clean and tight.

Warranty

We warrant that each of our LED lighting luminaire (the "Product(s)")that are purchased while this Warranty is in effect will be free from defects in materials and workmanship for the period of time specified in the table below(the "Warranty Period"). The Warranty Period runs from the date of original purchase from its authorized distributor/dealer.

We will repair, or at our option, replace the defective product (exterior finish, housing and heat sinks, lens, LED engine, power supply) during the standard warranty period. This warranty applies only to the repair or replacement of the product and only when the product is properly handled, installed and maintained according to our instructions.

This warranty excludes defects resulting from improper installation, acts of God, fire, vandal-ism or civil disturbances, power surges or improper power supply, and corrosive environment installations.

This warranty does not cover equipment, systems or components from other manufacturers that the purchaser uses in conjunction with the Product. Any repair, alteration or modification of the Product, including replacement of Product components with components of other manufacturers will void the warranty in its entirety.

Product	Which Models Nos. are Covered by this Warranty	Warranty Period
Block Harsh Series Environment Led Luminaire	BLK2 XXX-xxx	Five(7) Years

Harsh Environment Led Luminaire

INSTALLATION CHECKLIST

1. Verify if the steel pipe or cord grip are installed to at least five (5) full threads into the conduit entries of the fixture.

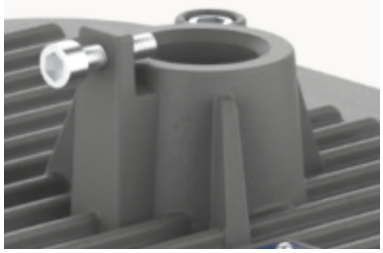

2. Verify field supply wires to luminaire (Wago connectors) per wiring diagrams and all electrical connections are tightened.

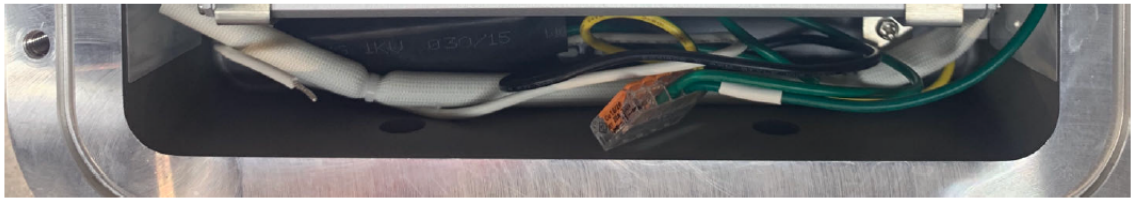

3. Verify all Wires are safely and neatly inside driver housing, Gasket of the housing is placed into the slot nicely and evenly.

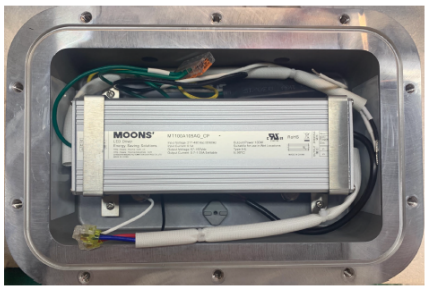

4. Verify captive closing screw is tightened to (7 N-m).

5. Follow " NPT Assembly Instructions" to prevent water leakage.

Harsh Environment Led Luminaire

NPT Assembly Instructions:

Step 1. Inspect the port and fitting to ensure that both are free of contaminants and excessive burrs and nicks.

Step 2. Apply a stripe of an anaerobic liquid pipe sealant around the male threads leaving the first two threads uncovered. If no liquid sealant is available, wrap Teflon tape (width of 12.7mm and thickness of 0.1mm) 2.5 - 3 turns in a clockwise direction, viewed from the pipe end, leaving the rest two threads uncovered.

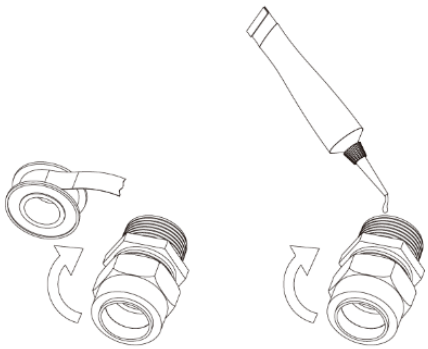

CAUTION: Teflon tape and some pipe sealants are destructive to hydraulic components. Always use extreme caution and follow manufacturer's recommendations for proper application of any sealant in order to prevent contamination.

Step 3. Screw the finger tight into the port.c

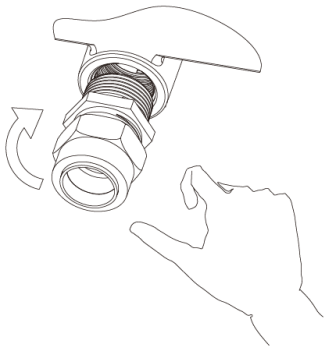

Step 4. Wrench tighten the fitting to the correct Turns Past Finger Tight position. A properly assembled fittings total thread engagement should be ≥5 turns.

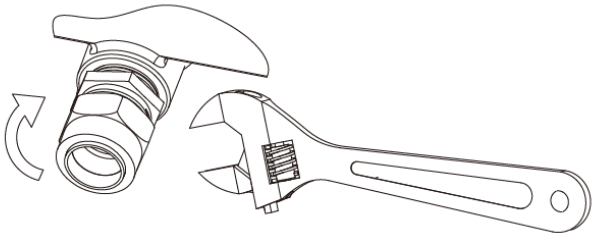

CAUTION: Never back off an installed pipe fitting to achieve proper alignment. Loosening installed pipe fittings will corrupt the seal and contribute to leakage and failure. (*Applicable standard: ASME B1.20.1-2013)