HazLoc Environment LED Luminaire

General Safety Information

Picture is for illustration purposes only.
Your model may vary

- To reduce the risk of death, personal injury or property damage from fire, electric shock, falling parts, cuts/abrasions and other hazards, please read all warnings and instructions included with and on the fixture box and all fixture labels.
- Before installing, servicing, or performing routine maintenance upon this equipment, please follow these general precautions.
- Commercial installation, service and maintenance of luminaires should be performed by a qualified licensed electrician.
- DO NOT INSTALL DAMAGED PRODUCT!
- This fixture is intended to be connected to a properly installed and grounded UL listed junction box.
- Make sure that the supply voltage is the same as the luminaire voltage.
- Do not install where the marked operating temperatures exceed the ignition temperatures of the hazardous atmosphere.
- Do not operate in ambient temperatures above those indicated on the luminaire nameplate.
- All gasket seals must be clean and undamaged.

WARNING:

RISK OF ELECTRICAL SHOCK

- Turn off electrical power at fuse or circuit breaker box before wiring fixture to the power supply.
- Turn off the power when you perform any maintenance.
- Verify that supply voltage is correct by comparing it with the luminaire label information.
- Make all electrical and grounded connections in accordance with the National Electrical Code and any applicable local code requirements.
- All wiring connections should be capped with UL approved wire connectors.
- Luminaire must be supplied by a wiring system with an equipment grounding conductor.

RED SKY LIGHTING LLC
9370 Pittsburgh Ave Rancho Cucamonga, CA 91730, USA
+1 (262) 456-5002 / contact@redskylighting.com / www.redskylighting.com

HazLoc Environment LED Luminaire

CAUTION:

RISK OF INJURY

- Always wear gloves and safety glasses when removing luminaire from carton, installing, servicing or performing maintenance.
- Avoid direct eye exposure to the light source while it is on.
- Account for small parts and destroy packing material, as these may be hazardous to children.

CAUTION:

RISK OF FIRE

- Keep combustible and other materials that can burn away from luminaire and lamp/lens.
- MIN 90°C SUPPLY CONDUCTORS.

This fixture is suitable for use in the following hazardous (classified) areas as defined by the National Electrical Code (NEC) and Canadian Electrical Code (CEC):

Hazardous Locations

Class I, Division 1, Groups C, D
Class I, Division 2, Groups A, B, C, D
Class II, Division 2, Groups F, G
Class III

Compliances	**Environmental Ratings**
UL 1598	Suitable for wet location
UL 844	IP66
UL 1598A	
CSA C22.2 NO. 250.0:21, 5th Ed	
CSA C22.2 No. 137, Edition: 2	

Refer to the luminaire nameplate for specific classification information, maximum ambient temperature suitability and corresponding operating temperature (T-Code).

Models:

BLK2-2-3-4-4A-5-6-7-8-9-10

2= Wattage or Lumen (12L-80W, 11700Lm; 14L-100W,14400Lm; 17L-120W, 17400Lm; 21L-150W, 21100Lm)

3= Voltage (100-277=100-277Vac, 347-480=347-480Vac)

4= LED Color temperature (CCT) (5K-5000K, 4K-4000K, 3K-3000K)

4A=Internal code (Blank - Blank. HAR-Custom)

5= Beam (25-25°, 60-60°,120-120°)

6= Rating (H1 - C1D1 / C1D2 / C2D2 / C3)

7= Lens (CG-Clear Glass)

8= Color (GRY – Gray)

9= Mounting (PND - Pendant, YKE - Yoke, C1 - Ceiling, S1 - Stanchion 25° (1-1/4” NPT), S2 - Stanchion 25° (1-1/2” NPT), S3 - Stanchion 90° (1-1/4” NPT), S4 - Stanchion 90° (1-1/2” NPT), W3 - Wall 90°, P1 - Slip-Fit Stanchion.

10= Production (Blank - Standard, BAA - Buy American Act)

HazLoc Environment LED Luminaire

Operating characteristic:

Rated voltage	power	Model	Ambient Temp		
			Class I, Division 1, Groups C, D	Class I, Division 2, Groups A, B, C, D	Class II, Division 2, Groups F, G
120-277Vac	80W	BLK2-12L-100-277	-40℃(-40°F) ~+60℃(140°F)	-40℃(-40°F) ~+60℃(140°F)	60℃(140°F)
	100W	BLK2-14L-100-277			
	120W	BLK2-17L-100-277			
	150W	BLK2-21L-100-277			
347-480Vac	80W	BLK2-12L-347-480			
	100W	BLK2-14L-347-480			
	120W	BLK2-17L-347-480			
	150W	BLK2-21L-347-480			

General Wiring Diagram:

CAUTION: Turn off electrical power at fuse or

circuit breaker box before wiring luminaire to the power supply.

All units must be individually connected to the AC supply.

Black = Line

White = Neutral

Green = Ground

Dimming control wire: Yellow =Vaux 12V dc

Purple = Dim+ 1~10V input

Pink*= Dim- (NEG)

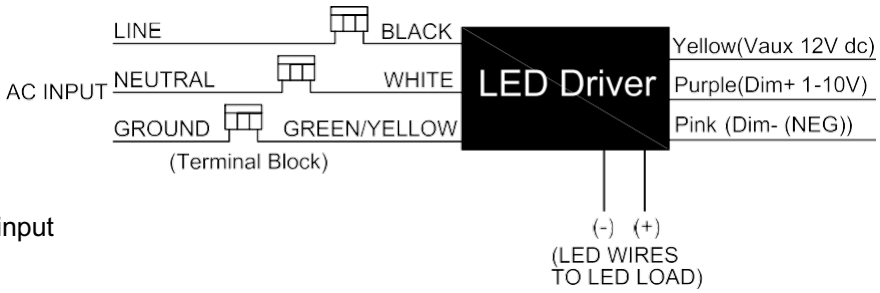

* You might receive the lead in grey from a previous version.

Installation

Electrical Connection

1. Connect field supply wires to luminaire wire leads (or Wago connectors).
2. Wire per wiring diagram and per required electrical codes.
3. Close the driver housing, making sure that all wires are safely inside the box.
4. Check the tightness of conduit and Tank Cover.
5. Turn power on.

HazLoc Environment LED Luminaire

Product Dimensions:

Unit: inch (mm)

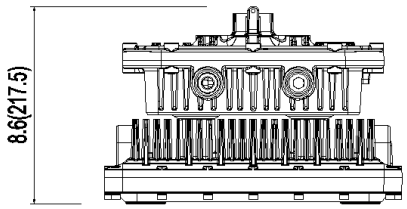

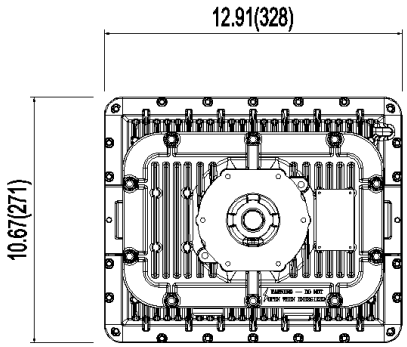

Installation & Operation:

The following installation is applicable to

Class I Division 1, Groups C, D

Class I Division 2, Groups A, B, C, D

Class II Division 2, Groups F, G

Class III

Class I, Zone 1, Group IIA, IIB

Class I, Zone 2, Group IIA, IIB, IIC

Zone 22

Note 1: All installation must refer to RSL " NPT Assembly Instructions" to prevent water leakage.

Note 2: Stanchion slip fitter For C1D1and C2D2: This pole-mounted bracket functions exclusively for structural support and involves no internal wiring.

Note 3: Yoke(Ceiling/Wall/Floor)/Stanchion slip fitter: Electricians should use metal electrical conduits meeting the C1D1 and C2D2 specification to connect to the Body_3/4”NPT port.

HazLoc Environment LED Luminaire

1.Pendant：

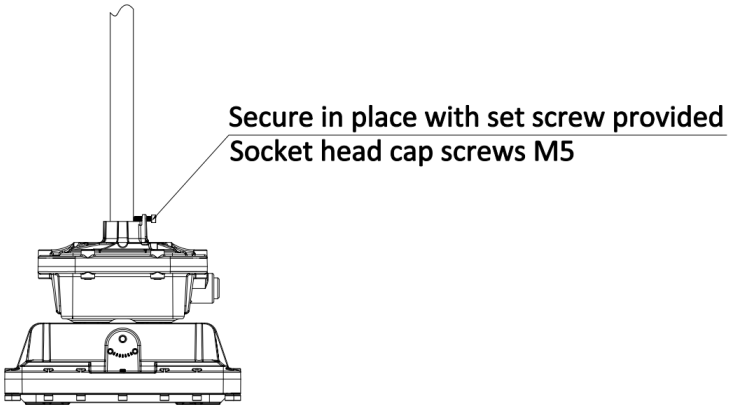

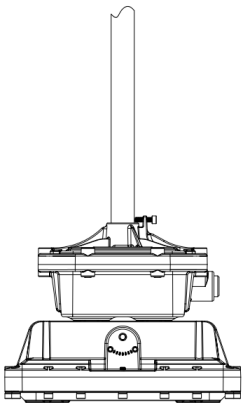

Step 1: Thread the fixture onto the NPT 3/4 inch conduit. Tighten the (M5) set-screw with torque value (4 N-m)

Step 2: Wire per wiring diagram.

2.Yoke (Ceiling/Wall/Floor)：

Ceiling Type

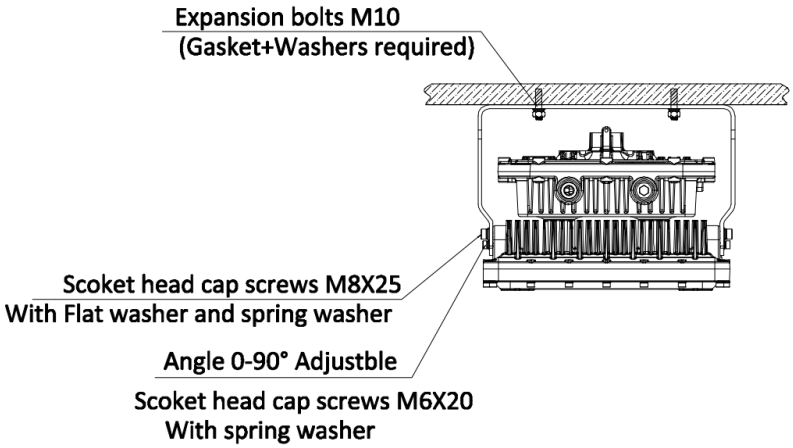

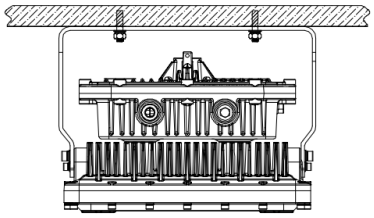

HazLoc Environment LED Luminaire

Wall Type

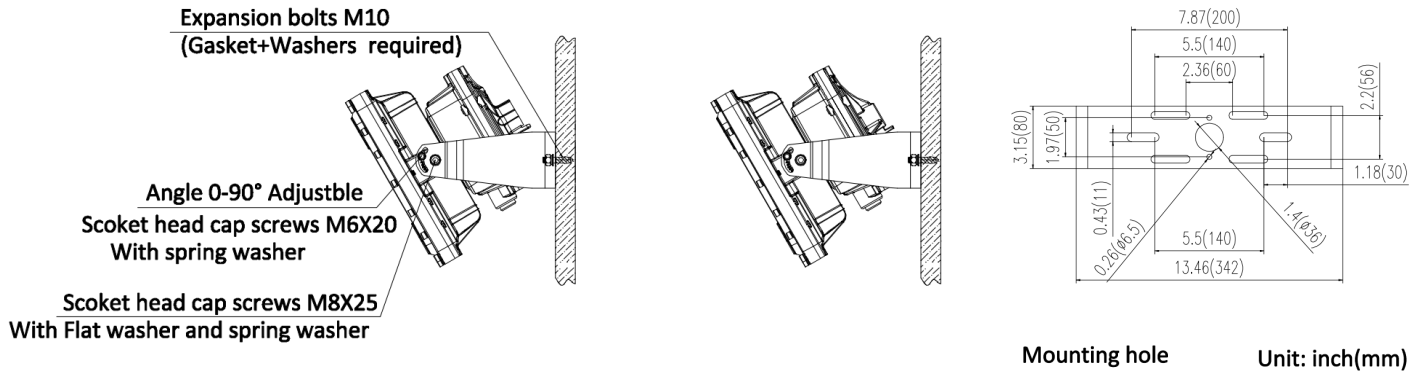

Floor Type

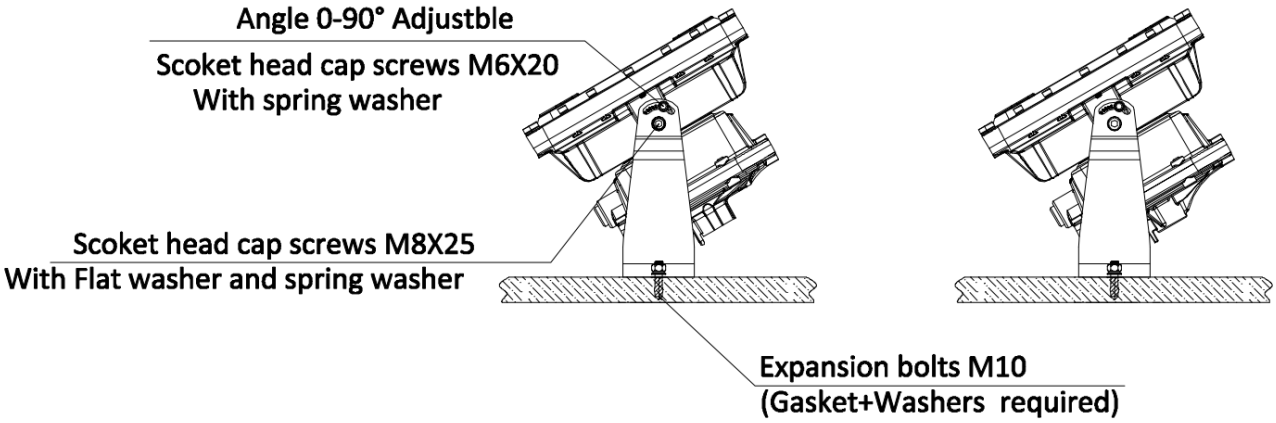

Step 1: Secure the yoke and fixture with 4 (M10) expansion bolts (not provided) directly to a structural member. Adjust the angle of the yoke and fix the position by tightening the two (M6) and two (M8) side screws (provided) with torque value (7 N-m).

Step 2: Wire per wiring diagram.

HazLoc Environment LED Luminaire

3.Wall 90°

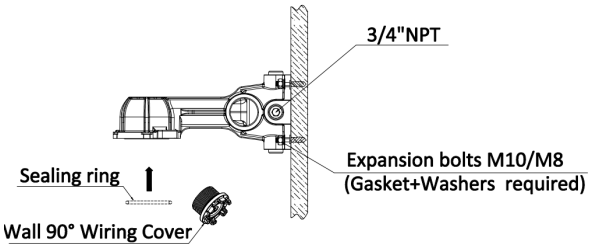

Step 1

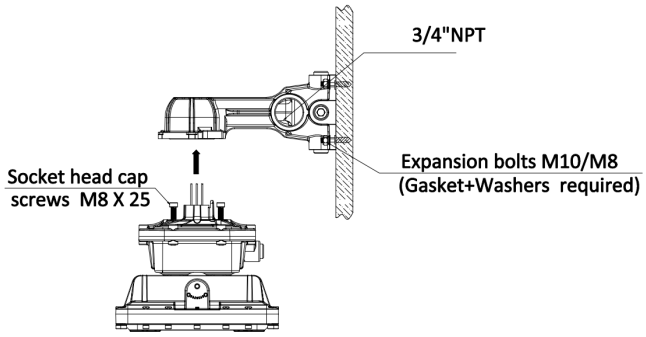

Step 2

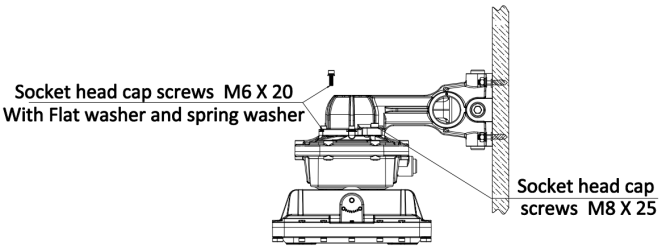

Step 3

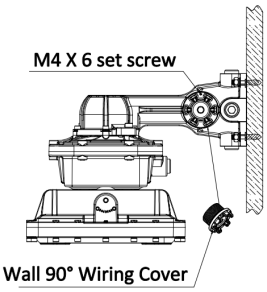

Step 4

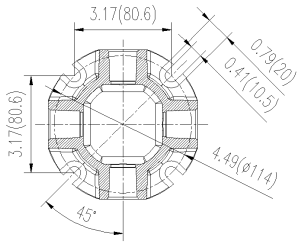

Mounting hole Unit: inch(mm)

Step 1: Drill holes on the wall according to the Wall Bracket dimension drawing. Align the Wall Bracket with the mounting holes and fasten it to the wall using M10/M8 (not provided) specification expansion screws with washers and gaskets. Meanwhile, check if the sealing ring is properly installed in place, and ensure the Wiring Cover has been removed for later use.

Step 2: Pre-install 2 M8 screws on the lamp body. Do not fully tighten them temporarily, maintaining a gap of approximately 14 mm from the lamp body. Pass the M8 screws on the lamp body through the crescent holes of the Wall Bracket, rotate 12 degrees to align with the 6 M6 threaded through holes of the bracket, and at the same time, lead the lamp's wires out through the hole of the Wiring Cover.*

Step 3: Tighten the 6 M6 screws and 2 M8 screws to a torque value of 7 N・m. Lead the external conduit through the 3/4"NPT port to the inner cavity of the Wall Bracket and pass it out through the hole of the Wiring Cover. Connect the wires led out from the lamp to the wires from the conduit using WAGO terminals.

Step 4: Tuck the sorted and connected wires into the inner cavity of the Wall Bracket. Inspect the wiring to ensure all wires are safely placed inside the lamp housing. Tighten the Wiring Cover to a torque value of 10 N・m, then tighten the M4 setscrews to a torque value of 1.5 N・m.

*Optionally, the lamp's lead wires can be passed through the 3/4"NPT port of the Wall Bracket and guided to the customer's junction box via a conduit to complete the wiring operation.

HazLoc Environment LED Luminaire

4. Stanchion 90° and Stanchion 25°

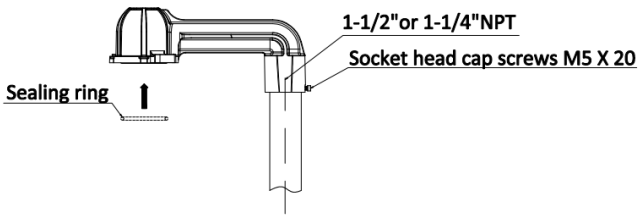

Step 1

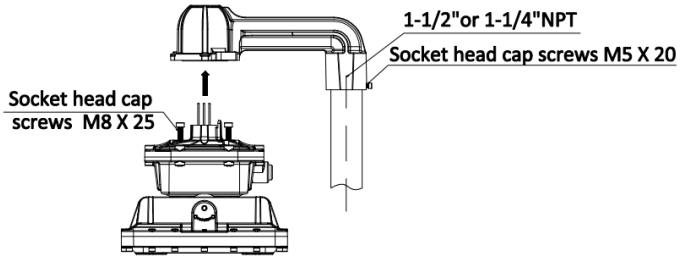

Step 2

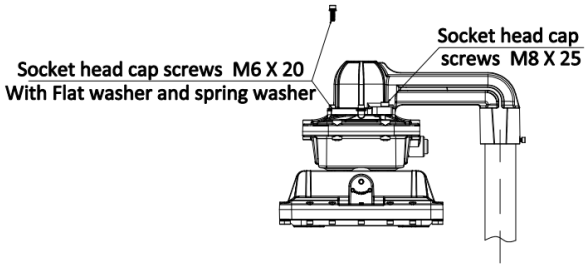

Step 3

Step 1: Firmly screw the Stanchion Bracket onto the NPT threaded end of the post, ensuring a thread engagement length of ≥5 threads. Confirm the proper installation direction, then tighten the M5 setscrews to a torque value of 2 N・m. Meanwhile, check if the sealing ring has been correctly installed on the bracket.

Step 2: Pre-install 2 M8 screws on the lamp body. Do not fully tighten them temporarily, maintaining a gap of approximately 14 mm from the lamp body. Pass the M8 screws on the lamp body through the crescent holes of the bracket, rotate 12 degrees to align with the 6 M6 threaded through holes of the bracket. At the same time, wiring can be performed via WAGO terminals in the inner cavity of the bracket, or the lamp's lead wires can be routed to the junction box at the conduit through the 1-1/2" or 1-1/4"NPT port for wiring.

Step 3: Inspect the wiring to ensure all wires are safely placed inside the lamp housing. Then tighten the 6 M6 screws and 2 M8 screws to a torque value of 7 N・m.

HazLoc Environment LED Luminaire

5.Ceiling

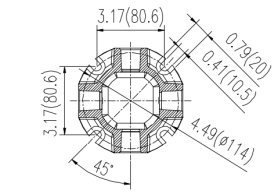

Mounting hole Unit: inch(mm)

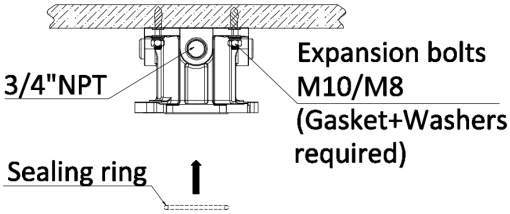

Step 1

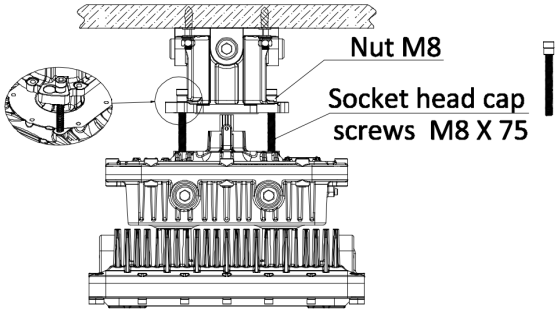

Step 2*

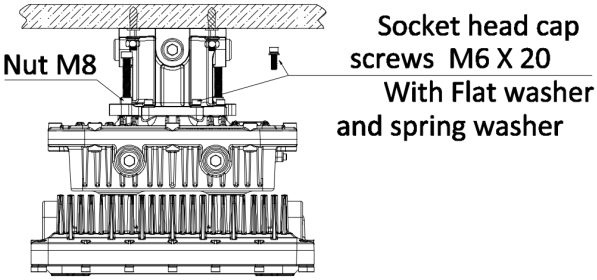

Step 3

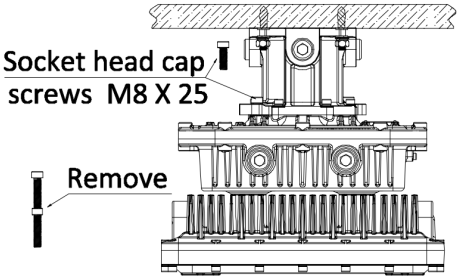

Step 4

Step 1: Drill holes on the wall according to the Ceiling Bracket dimension drawing. Align the Ceiling Bracket with the mounting holes and fasten it to the wall using M10/M8 (not provided) specification expansion screws with washers and gaskets. Meanwhile, check if the sealing ring is properly installed in place.

Step 2: Pre-install 2 M8 Screw and nut assemblies on the lamp body. Then pass the M8 Screw and nut assemblies on the lamp body through the crescent holes of the bracket, rotate 12 degrees to align with the 6 M6 threaded holes of the bracket, suspended on a bracket. At this moment, wiring can be performed via WAGO terminals in the inner cavity of the bracket, or the wires can be routed to the conduit for wiring through the 3/4"NPT port.

*When suspending wiring operations, it is recommended to use Safety Cable to prevent collisions and accidental drops of lighting fixtures.

Step 3: Inspect the wiring to ensure all wires are safely placed inside the lamp housing. Align the CEIL and FIXTURE explosion-proof surfaces by adjusting the screw and nut assemblies on the lamp body, then tighten the 6 M6 screws to a torque value of 7 N・m.

Step 4: Remove 2 M8 Screw and nut assemblies, then tighten the 2 M8 screws to a torque value of 7 N・m.

HazLoc Environment LED Luminaire

6. Stanchion slip fitter(Pole Type Stanchion)

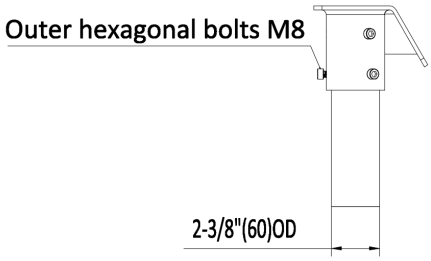

Step 1

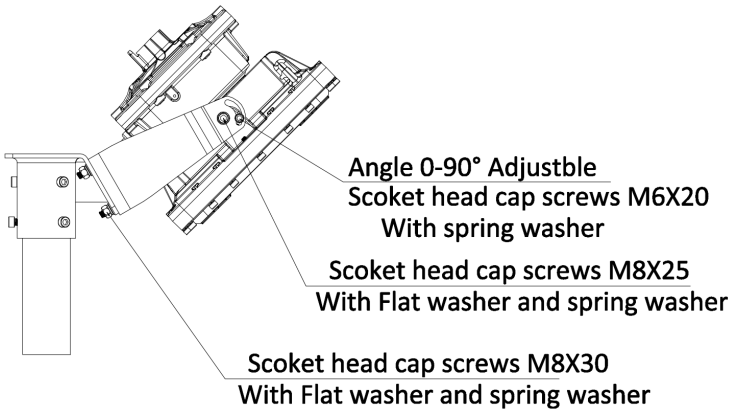

Step 2

Step 1: Measure and verify pole outer diameter. Place Slip fitter on the 2-3/8” O.D. (60mm) Tenon. Tighten all 6 (M8x20mm) set screws. Pull cable through center hole(Only for C1D2).

Step 2: Place and hold the fixture with yoke onto Slip Fitter. Secure with the 4 (M8) hex bolts and washers on the top of the Slip fitter. This may require holding set screws in place with allen wrench.

Step 3: Loosen the Locking Bolt (2 M8 and 2 M6) of the yoke and adjust the angle of the fixture as desired. Then tighten the 2 M6 screws and 2 M8 screws to a torque value of 7 N・m.

Step 4: Wire per wiring diagram.

HazLoc Environment LED Luminaire

7.NPT male reducer:

1”to 3/4” NPT for Pendant

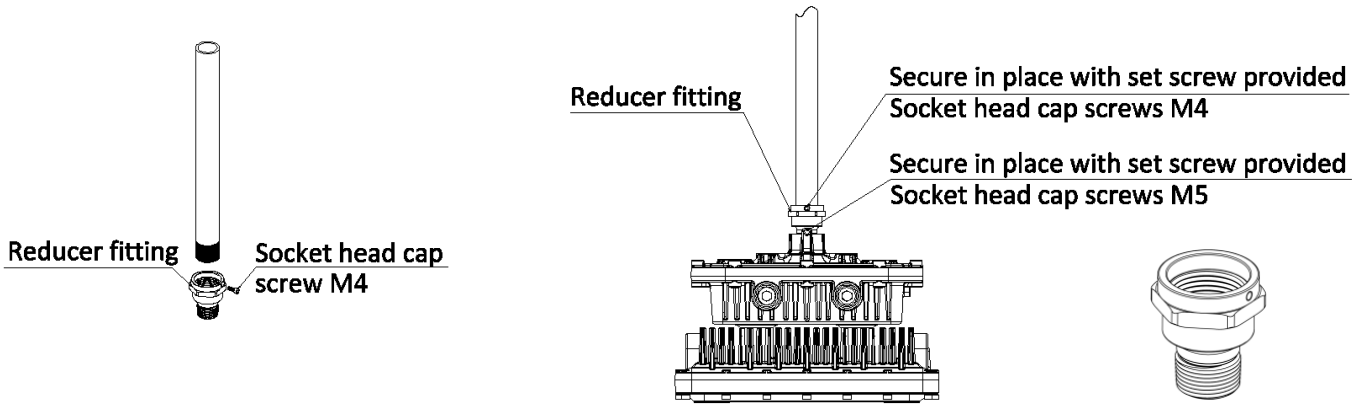

Step 1: Screw the reducer fitting into NPT 1 inch conduit, and total thread engagement should be ≥5 turns, Tighten the M4 set-screw.

Step 2: Screw the reducer fitting into NPT3/4 inch interface on the upper of the lamp body, and total thread engagement should be ≥5 turns, Tighten the M5 set-screw.

1”to 3/4” NPT for (Wall / Ceiling / Yoke)

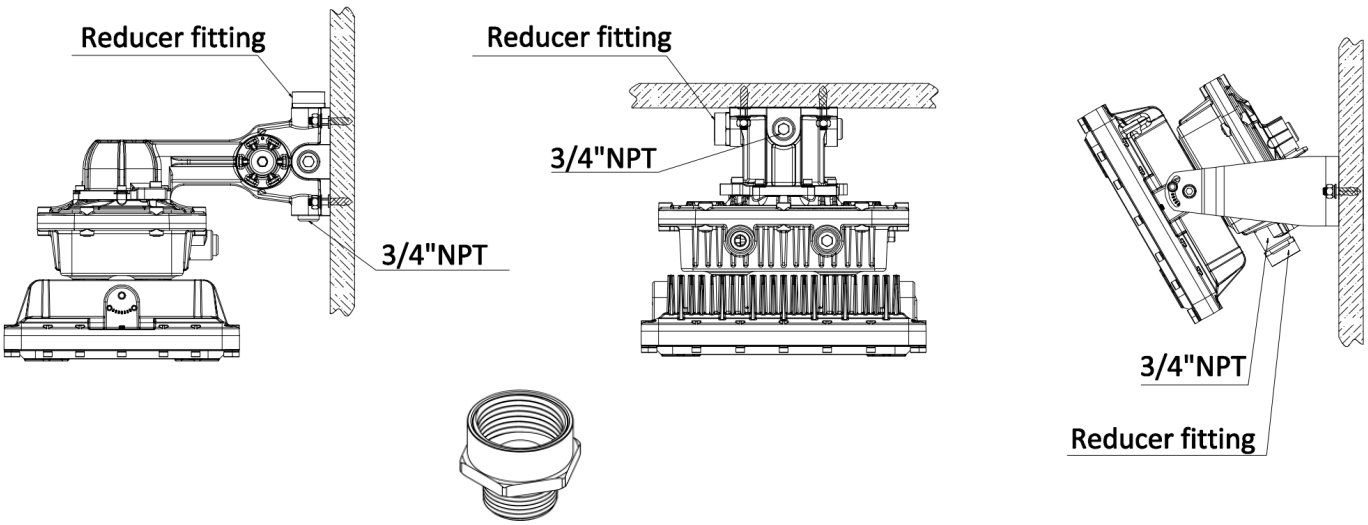

Step 1: Use the Allen wrench to remove the NPT 3/4 inch plug on the Wall and Ceiling Brackets.

Step 2: Screw the reducer fitting into NPT 3/4 inch interface on the upper of the bracket. The total thread engagement shall be ≥5 threads.

HazLoc Environment LED Luminaire

LENS WIRE GUARD INSTALLATION (kit sold separately)

Step 1. Loosen the 4 (M6) hexagon socket head cap screws of the lens cover with torque value 7 N-m.

Step 2. Locate and center the guard to the outside of the fixture housing with the (4x) clips aligned with the holes of the screws.

Step 3. Install and tighten the 4 (M6) screws through the mounting clips and into the housing screw holes torquing to (7 N-m).

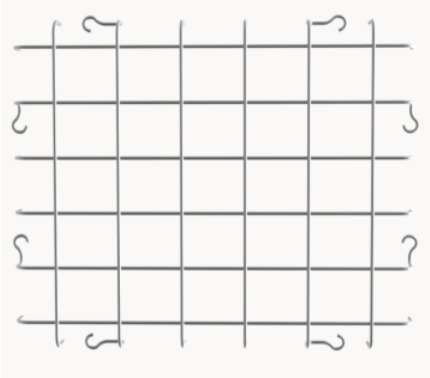

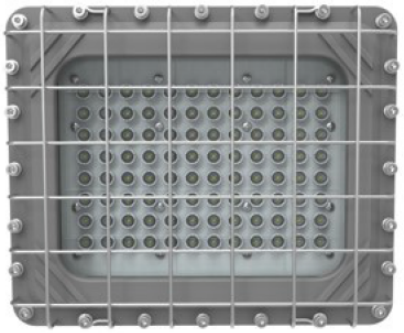

SAFETY CABLE KIT INSTALLATION (kit sold separately)

Step 1: Install Secondary Retention Cable to secure location per standards

Step 2: Secure Carabiner through thru-holes (Dia-12mm) on top of fixture.

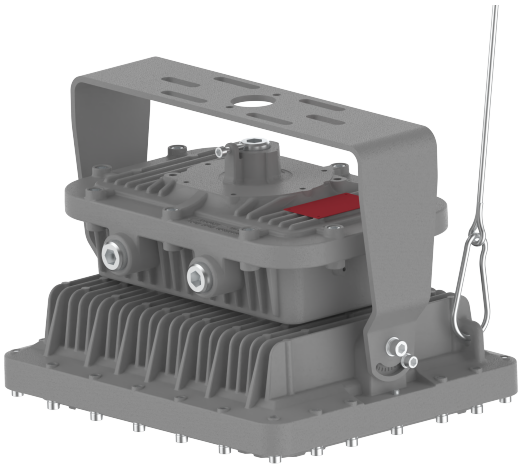

HazLoc Environment LED Luminaire

INSTALLATION CHECKLIST

1. Verify if the steel pipe or cord grip are installed to at least five (5) full threads into the conduit entries of the fixture.

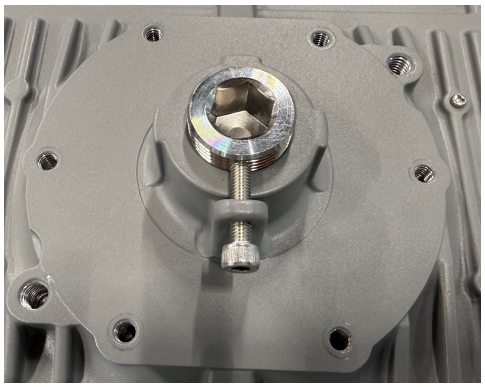

2. Verify captive closing screw is tightened to (7 N-m).

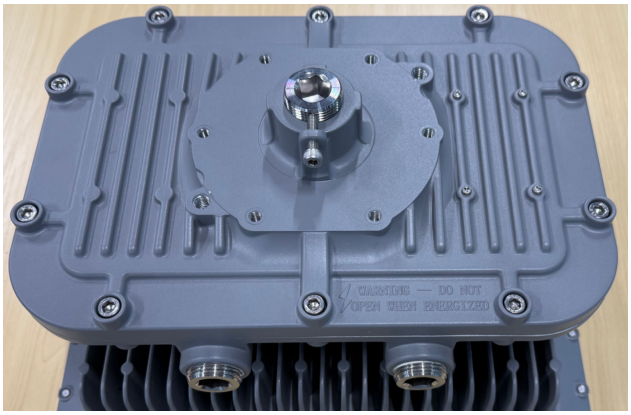

3. Follow RSL " NPT Assembly Instructions" to prevent water leakage.

HazLoc Environment LED Luminaire

Servicing

To avoid personal injury, disconnect power to the light and allow the unit to cool down before performing maintenance.

Perform visual, electrical, and mechanical inspections on a regular basis. The environment and frequency of use should determine this. However, it is recommended that checks should be made at least once a year. Frequency of use and environment should determine this.

The external lens should be cleaned periodically to ensure continued luminaire performance. Clean the lens with a clean, damp, non-abrasive, lint-free cloth. If this is not sufficient, use a mild soap or a liquid cleaner. Do not use an abrasive, strong alkaline or acid cleaner as damage may occur.

Inspect the cooling fins on the luminaire to ensure that they are free of any contamination (i.e. excessive dust build-up). Clean with a non-abrasive cloth if needed.

Mechanically check to make sure all parts are properly assembled.

Electrically check to make sure that all connections are clean and tight.

Warranty

We warrant that each of our LED lighting luminaire (the "Product(s)") that are purchased while this Warranty is in effect will be free from defects in materials and workmanship for the period of time specified in the table below (the "Warranty Period"). The Warranty Period runs from the date of original purchase from its authorized distributor/dealer.

We will repair, or at our option, replace the defective product (exterior finish, housing and heat sinks, lens, LED engine, power supply) during the standard warranty period. This warranty applies only to the repair or replacement of the product and only when the product is properly handled, installed and maintained according to our instructions.

This warranty excludes defects resulting from improper installation, acts of God, fire, vandalism or civil disturbances, power surges or improper power supply, and corrosive environment installations.

This warranty does not cover equipment, systems or components from other manufacturers that the purchaser uses in conjunction with the Product. Any repair, alteration or modification of the Product, including replacement of Product components with components of other manufacturers will void the warranty in its entirety.

Product	Which Model Nos. are Covered by this Warranty	Warranty Period
Hazloc Environment LED Luminaire	BLK2 H1 series	Driver-Seven (7) Years LEDS- Ten (10) Years

HazLoc Environment LED Luminaire

NPT Assembly Instructions*:

Step 1: Inspect port and fitting to ensure that both are free of contaminants and excessive burrs and nicks.

Step 2: Apply a strip of an anaerobic liquid pipe sealant around the male threads leaving the first two threads uncovered. If no liquid sealant is available, wrap Teflon tape (width of 12.7mm and thickness of 0.1mm) 2.5- 3 turns in a clockwise direction, viewed from the pipe end, leaving the rest two threads uncovered.

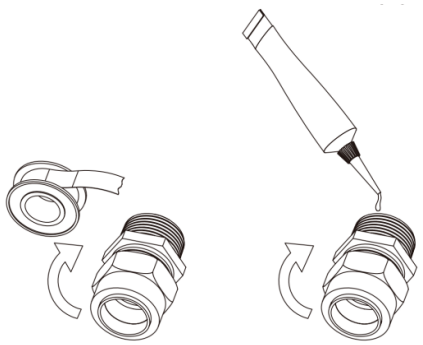

CAUTION: Teflon tape and some pipe sealants are destructive to hydraulic components. Always use extreme caution and follow manufacturer's recommendations for proper application of any sealant in order to prevent contamination.

Step 3: Screw finger tight into the port.

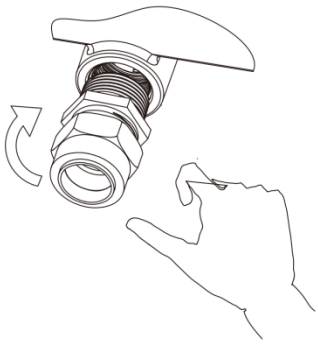

Step 4: Wrench tighten the fitting to the correct Turns Past Finger Tight position. A properly assembled

fittings total thread engagement should be ≥5 turns.

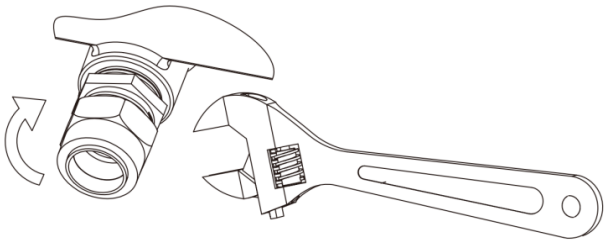

CAUTION: Never back off an installed pipe fitting to achieve proper alignment. Loosening installed pipe fittings will corrupt the seal and contribute to leakage and failure.

(*Applicable standard: ASME B1.20.1-2013)